Operating Manual

Ultrasonic Flowmeter USM GT400

Issued:	07.05.2021
Version:	10
Firmware:	1.5

Manufacturer

Our customer service is available for technical queries:

Address	RMG Messtechnik GmbH Otto-Hahn-Straße 5 D-35510 Butzbach
Telephone Switchboard	+49 6033 897 – 0
Telephone Service	+49 6033 897 – 0
Telephone Spare Parts	+49 6033 897 – 173
Fax	+49 6033 897 – 130
E-Mail	service@rmg.com

Original Document

The Ultrasonic Flowmeter **USM GT400 OPERATING INSTRUCTION** 07.05.2021 is the original document.

This document may serve as a reference for translations into other languages. Please use in case of any uncertainties the German version as main reference.

Note

Unfortunately, paper is not updated automatically, whereas technical development continuously advances. Therefore, we reserve the right to make technical changes regarding the representations and specifications of these operating instructions. The latest version of this manual (and other devices) can be downloaded at your convenience from our Internet homepage:

www.rmg.com

Date created	1/31/2014
…	
4th revision date	02/12/2018
5th revision date	09/4/2018
6th revision date	11/18/2018
7th revision date	12/14/2019
8th revision date	02/19/2021
9th revision date	05/07/2021

Document version and language

Document version	Ultrasonic Flowmeter USM GT400 manual de May 7th 2021
Language	EN

Content

1 ABOUT THIS MANUAL 1

1.1 Objective of the manual 1

1.2 Specialized knowledge required 2

1.2.1 Specialized knowledge required 2

1.2.2 Abbreviations 3

1.2.3 Layout of instructions 4

1.2.4 Working with the device 5

1.2.5 Risk assessment and minimization 11

1.2.6 Validity of the manual 13

1.2.7 Transport 14

1.2.8 Scope of delivery 16

1.2.9 Disposal of packaging material 16

1.2.10 Storage 16

1.3 Explosion-proof design 17

1.3.1 General information 17

1.4 Inspection and maintenance work 18

1.4.1 General information 18

2 QUICK GUIDE 20

2.1 Mechanical connection 21

2.1.1 Connection flanges 21

2.1.2 Inlet / outlet piping 21

2.1.3 Joining pressure connections 21

2.2 Electrical connection 22

2.3 Start up 22

2.4 Earthing 23

2.5 Parameter setting 24

3 DEVICE OVERVIEW 25

3.1 Main components 25

3.2 Ultrasonic electronics 27

3.3 Arrangement of the ultrasonic transducers 31

4 FUNCTIONAL PRINCIPLE – ULTRASONIC-FLOW MEASUREMENT 32

4.1 General description 33
4.2 Correction of the base line 37
4.2.1 Base line correction via polynomial 38
4.2.2 Correction via a piecewise linearization 39
4.3 Diagnostic function Speed of Sound 40
4.3.1 Standard method of SoS calculation 40
4.3.2 SoS calculation via gas components 40
4.3.3 Extended SoS calculation 41
4.4 Import of gas composition data 42
4.4.1 Option 4: Data input on fixed defaults 43
4.4.2 Data input on fixed defaults for air 43
4.4.3 Data input via RMGBus 45
4.4.4 Data via Modbus (USM GT400 is SLAVE) 46
4.4.5 Import of data via Modbus (USM GT400 is Master) 47
4.5 Batch mode 52
4.6 Signal damping 52

5 SAFETY 53
5.1 Intended use 54
5.2 Layout of instructions 55
5.3 Qualification of the personnel 56
5.4 Safety instructions 57
5.4.1 Hazards during transporting 58
5.4.2 Hazards during installation 58
5.4.3 Hazards during start up 60
5.4.4 Hazards during cleaning 61
5.4.5 Hazards during maintenance and repairs 61
5.4.6 Hazards during operation 62
5.4.7 Hazards for operation in potentially explosive environments 63
5.5 Responsibilities of the operator 64

6 TRANSPORT AND STORAGE 65
6.1 Transport 66
6.1.1 Scope of supply 66
6.1.2 Transporting the device 67
6.1.3 Unpacking the device 67
6.1.4 Disposal of packaging material 70
6.1.5 Prior to installation 70
6.1.6 Removing the transporting locks 71

6.2 Packing the device for transportation 73
6.3 Storage 79
6.3.1 Packing the device for storage 79
6.3.2 Checking the device after storage 80
7 CONSTRUCTION AND PLANNING 81
7.1 Connection flanges 81
7.2 Seals 82
7.2.1 Flat seal 83
7.2.2 Grooved gaskets 84
7.2.3 Spiral seals 85
7.3 Screws 87
7.4 Installation possibilities 88
7.4.1 Dependency on the gas flow direction 88
7.4.2 Two devices series connected (Face to Face) 91
7.5 Flow computer 93
8 INSTALLATION 95
8.1 Assembly work preparations 96
8.2 Installation of the device 99
8.2.1 Mounting the inlet and outlet piping 99
8.2.2 Installation of the connection box 101
8.3 Connecting the device electrically 103
8.3.1 Connecting the power supply 108
8.3.2 Digital interfaces of USM-GT400 108
8.3.3 Connecting the computer for RMGView^{USM} 110
8.3.4 Connecting the flow computer 110
8.3.5 Connection of external DSfG-Device-F via Modbus 113
8.3.6 Interface converter 124
8.3.7 Connecting the device to earth 126
8.4 Installing the pressure connection 128
8.5 Outdoor installation 130
9 START UP 132
9.1 Comparing meter parameters 132
9.2 Checking functions of the USM 132
9.3 Reading out speed of sound 133

10 OPERATION 134

10.1 Measuring values and parameters 135
10.1.1 Input protection for parameters 135
10.1.2 Parameter and measuring values with variable units 135
10.1.3 Calibration and Service Switch 136
10.1.4 Interfaces to converters and controllers 136
10.1.5 Interface for service and parameterization 137
10.1.6 Adaptation of the DZU protocol to ERZ 2400 138

10.2 Calling up and changing the parameters via the ultrasonic electronics 139
10.2.1 Calling up the value of a parameter 140
10.2.2 Entering data 141
10.2.3 Changing the parameters of protection E and S 144

10.3 Parameterize the USM interface 149
10.3.1 Interface 0 149
10.3.2 Interface 1 150
10.3.3 Interface 2 150

10.4 Modbus communication in detail 161
10.4.1 Codes supported 161
10.4.2 Data types 161

10.5 Configuration of the current output 163

10.6 List of the measurement values and parameters 163

11 MAINTENANCE 164

11.1 Maintenance schedule 165

11.2 Checking the device for leaks 165

11.3 Checking the device for any signs of damage 166

11.4 Changing the battery 166

11.5 Changing the transducer 166

11.6 Changing the ultrasonic electronics 167

11.7 Cleaning the device 167

11.8 Check the official seal 168

11.9 Decommissioning and disposal 168

12 ALARM AND WARNING MESSAGES 170

12.1 Alarm messages 171

12.2 Warning messages 172

12.3 Notes 175
12.4 Troubleshooting 175

13 TECHNICAL SPECIFICATIONS 177
13.1 Performance data 178
13.2 Approved gas types 180
13.2.1 Suitability and safety for natural gas containing H2 180
13.3 Approved measuring range according to MID 181
13.4 Type plate 182
13.4.1 Type plate ATEX / IECEx 183
13.4.2 Type plate NEC (CSA) 184
13.5 Weights and dimensions 184
13.5.1 NEC (CSA) 185
13.5.2 ATEX / IECEx 186
13.6 Inner diameter of connecting spool pieces 189
13.7 Official seal diagram 192
13.7.1 Type plate 192
13.7.2 Ultrasonic electronics 193
13.7.3 Ultrasonic gas meter 195
13.8 Transducer types 197

14 SPARE PARTS AND ACCESSORIES 199

15 LISTS OF PARAMETERS AND MEASURED VALUES 201

16 USM GT400 APPROVAL 246
16.1 Metrological approvals 246
16.2 Pressure devices approval 246
16.3 Electromagnetic compatibility 246
16.4 Explosion protection approval 246
16.5 Standards, directives and guidelines 247

17 USM GT400 GLOSSARY 249

18 USM GT400 ATTACHMENT 250

1 About this manual

Content

1.1	**Objective of the manual**	**1**
1.2	**Specialized knowledge required**	**2**
1.2.1	Specialized knowledge required	2
1.2.2	Abbreviations	3
1.2.3	Layout of instructions	4
1.2.4	Working with the device	5
1.2.5	Risk assessment and minimization	11
1.2.6	Validity of the manual	13
1.2.7	Transport	14
1.2.8	Scope of delivery	16
1.2.9	Disposal of packaging material	16
1.2.10	Storage	16
1.3	**Explosion-proof design**	**17**
1.3.1	General information	17
1.4	**Inspection and maintenance work**	**18**
1.4.1	General information	18

1.1 Objective of the manual

In this chapter you will be given information on this manual.

The manual provides you with the information that is designed for trouble-free and safe operation.

The ultrasonic gas meter is state of the art and conceived and manufactured according to the recognized safety standards and guidelines.

However, risks may arise during use that can be easily avoided by observing this manual.

For this reason, you may only use the device as intended and in technically sound condition.

If the ultrasonic gas meter is not used for its intended purpose, warranty claims will be void.

1.2 Specialized knowledge required

This manual provides information that is necessary for fault-free and safe operation.

The Ultrasonic Flowmeter USM GT400 was designed and produced according to the state of the art and generally recognized safety standards and directives. However, its use can entail dangers that are avoidable by complying with this manual. The device must only be used as intended and in technically sound condition.

⚠ Vorsicht

Unintended use voids all warranty claims and the Ultrasonic Flowmeter USM GT400 can also lose its approvals.

1.2.1 Specialized knowledge required

Persons working with or on the device must have the following knowledge:

- training / education for working in potentially explosive environments.
- the ability to correctly assess dangers and risks when using the device. Possible dangers are, e.g., components under pressure or the result of incorrect installation.
- recognize dangers that could be caused by the used flow medium.
- training / education by RMG for working with gas measuring instruments.
- education / instruction in all country-specific standards and directives to be observed for work that is to be carried out on the device.

Further information can be found under:

⇨ Chapter 5.3, „Qualification of the personnel“ on page 56

1.2.2 Abbreviations

The following abbreviations are used:

AGC	Automatic Gain Control
ca.	circa, approximately
as app.	as applicable
max.	maximum
MC	Measurement Canada
MID	Measurement Instruments Directive
min.	minimum
SNR	Signal to Noise Ratio
SoS	Speed of Sound
TD	Transducer (ultrasonic transmitter and receiver)
TNG	Transducer of a certain production type.
USE	Ultrasonic electronics
USM	Ultrasonic gas meter
e.g.	For example

1.2.3 Layout of instructions

The following notices are used:

4

Danger

This warning notice informs you of imminently threatening dangers that can arise due to misuse/operator error. If these situations are not avoided, death or severe injuries can occur.

Warning

This warning notice informs you of potentially dangerous situations that can arise due to misuse/operator error. If these situations are not avoided, minor injuries can occur.

Caution

This notice informs you of potentially dangerous situations that can arise due to misuse/operator error. If these situations are not avoided, damage to the device or nearby property can occur.

Note

This notice provides you with helpful tips to make your work easier. This notice also provides you with further information about the device or the work process in order to prevent operator error.

1.2.4 Working with the device

1.2.4.1 Safety instructions Danger, Warning, Caution and Note

Danger

All of the following safety notices must be observed!

Disregard of the safety notices can result in danger to the life and limb or environmental and property damage.

Bear in mind that the safety warnings in this manual and on the device cannot cover all potentially dangerous situations, because the interaction of various conditions can be impossible to foresee. Merely following the instructions may not suffice for correct operation. Always remain attentive and consider potential consequences.

- Read this operating manual and especially the following safety notices carefully before working with the device for the first time.
- Warnings are provided in the operating manual for unavoidable residual risks for users, third parties, equipment, or other property. The safety instructions used in this manual do not refer to unavoidable residual risks.
- Only operate the device in fault-free condition and in observance of the operating manual.
- Compliance with local statutory accident prevention, installation and assembly regulations is also mandatory.

Caution

All notices in the manual must be observed.

Use of the gas chromatograph PGC 9300 is only permitted in accordance with the specifications in the operating manual.

RMG assumes no liability for damages arising due to disregard of the operating manual.

Danger

Service and maintenance tasks or repairs that are not described in the operating manual must not be carried out without prior consultation with the manufacturer.

Changes to the device are not permitted.

The technical specifications must be observed and followed for safe operation (see chapter 13: Technical specifications).

Performance limits must not be exceeded.

Please only use screws, bolts, nuts and seals or parts with comparable characteristic values for installing the meter in the pipeline. (see chapter 7 Construction and Planning)

For safe operation, the device must only be used in the scope of the intended use. (see chapter 5.1 Intended use).

1.2.4.2 Dangers during commissioning

Initial commissioning	The initial commissioning must only be carried out by specially trained personnel (training by RMG) or RMG service personnel.

Note

An acceptance test certificate and corresponding test report must be created for the commissioning.

These, the operating manual and the CE Declaration of Conformity must be stored so that they are always readily available. In the process, the entire documentation, including the conformity declarations and certificates must be checked for completeness.

As far as possible, all sharp edges on the device have been removed. Nevertheless, personal protective equipment must be used for all work, which must be provided by the operator.

Danger

This symbol is used in the manual as a warning of the danger of explosion; observe the instructions following the symbol.

With the danger of explosion, the following must be observed, in particular:

- Install the device as specified in the operating manual. If the device is not installed as specified in the operating manual, there may be a risk that other connected devices do not have adequate explosion protection.

  The explosion protection is lost!

- Inadequately qualified persons working on the equipment are unable to correctly estimate dangers. Explosions can be triggered. Only work on the equipment if you have the appropriate qualifications.
- Components can be damaged if you do not use suitable tools and materials. Use tools that are recommended for the respective work in the operating manual.

Mechanical installation	Mechanical installation must only be performed by appropriately qualified technicians.
Electrical installation	Installation on electrical components must only be carried out by qualified electricians.
Mechanical and/or electrical installation	These qualified personnel require training specifically for work in explosion-prone areas. Qualified personnel are persons who have training / education in accordance with **DIN VDE 0105, IEC 364** or **comparable standards**.

Danger

Connection of pressurized pipelines must only be carried out by trained qualified personnel.

Danger

The installation and removal of the USM GT400 may only take place in a depressurized state and in an explosion-free atmosphere. During the installation process, the descriptions in the operating instructions must be observed.

In general, it is recommended to carry out an exchange only in consultation with RMG Service.

After working on pressure-bearing components, the tightness must be checked.

All of the above points also apply to repair and maintenance work and generally when the meter has to be opened.

Flange fastening elements, screw plugs, screw connections and check valves as well as pressure extraction screw connections, valves and protective tubes must not be loosened during operation.

1.2.4.3 Dangers during maintenance and repair

Operating personnel	The operating personnel use and operate the device in the scope of the intended use.
Maintenance personnel	Work on the device must only be carried out by qualified personnel who can carry out the respective tasks on the basis of their technical training, experience and familiarity with the applicable standards and requirements. These qualified personnel are familiar with the applicable statutory regulations for accident prevention and can independently recognize and avoid potential dangers.
Maintenance and cleaning	Maintenance and cleaning must only be performed by appropriately qualified technicians.

Danger

Inadequately qualified persons working on the equipment are unable to correctly estimate dangers. Explosions can be triggered. If work on live equipment must be conducted in explosion-prone areas, sparks that are created can trigger an explosion.

Only work on the equipment if you have the appropriate training and qualifications.

Danger

The device can be damaged if it is not cleaned as specified in the operating manual. Only clean the device as specified in the operating manual.

If you do not use the appropriate tool, components may be damaged. The explosion protection becomes invalid.

- **Only clean the device with a slightly damp cloth!**

Danger

The USM GT400 must only be used as intended! (Chapter 5.1).

Danger

Prevent use of the USM GT400 as a potential climbing aid or use of attachments of the USM GT400 as potential handles.

1.2.4.4 Qualifikation of the user

Notice

In general, the following is recommended for all persons working with or on the USM GT400:

- **Training / education for work in explosion-prone areas.**
- **The capacity to be able to correctly estimate dangers and risks when working with the gas USM GT400 and all connected devices. Possible dangers include components that are under pressure and consequences of incorrect installation.**
- **Recognition of dangers that can arise from the flow medium that is used.**
- **Training / education by RMG for work with gas measuring devices.**
- **Education / instruction in all national standards and directives to be complied with for the work to be carried out on the USM GT^^400 analytical computer.**

1.2.5 Risk assessment and minimization

According to assessment by qualified employees of RMG, the USM GT 400 is subject to risks during its use. Risks can also arise due to high pressures and occasionally due to pressures that are too low. Work outside of the permissible temperature range can also lead to dangers. Impermissible current and voltage values can trigger explosions in explosion-prone areas. The risk assessment requires an emptying and ventilation of the pipeline for connection of a USM GT 400. Then and only then it is assured that there is not an explosion-prone gas mixture in the pipeline. Naturally, work must only be carried out by trained personnel (see chapter 5.3 Qualification of the personnel) who are also trained to recognize suitable tools and use them exclusively. These risks were summarized alongside development and measures were taken to minimize these risks.

Measures for risk minimization:

- All pressurized parts are designed in accordance with AD 2000 rules and regulations, Pressure Equipment Directive, Annex 1
- The complete pressure design has been inspected by TÜV Hessen
- All pressurized parts have been manufactured with a material certificate; there is an uninterrupted change of batch tracing of pressurized components
- The mechanical properties of all relevant pressurized components have been subjected to tension tests, notch impact bending tests and hardness tests
- Non-destructive testing was also carried out: X-ray and ultrasonic inspection of the meter housing for defective points in material, surface crack testing with magnetic powder and a color penetration process
- Strength tests for components were conducted at 1.5 times the nominal pressure for the pressure testing; the leak testing for the assembly was conducted at 1.1. times the nominal pressure. Certificates were issued for successfully passed tests.
- The maximum operating pressure and the permissible temperature range are specified on the type plate of the device. Operation of the device is only permitted within these specified ranges.

Danger

The following applies for work in explosion-prone areas (all zones):

- **Only tools that are approved for Ex Zone 1 are permitted for maintenance and repair tasks. Components can be damaged if you do not use suitable tools.**

  The explosion protection is lost.
- **Otherwise, work must only be carried out when there is not an explosive atmosphere.**
- **The risk of ignition due to impact or friction must be avoided.**
- **The wiring from and installation of the gas chromatograph PGC 9300 in explosion-prone areas must only be carried out by trained personnel in accordance with EN60079-14 and in observance of national regulations.**
- **Qualified persons must satisfy the definitions in accordance with DIN EN 0105 or IEC 364 or directly comparable standards.**
- **Only trained and instructed personnel are permitted. Work on the measuring system must only be carried out by qualified persons and inspected by responsible qualified supervisors.**
- **Qualified persons have been authorized by the person responsible for safety of personnel to carrying out such work on the basis of their training, experience or instruction and familiarity with applicable standards, provisions, accident prevention regulations and system conditions. It is essential that these persons are able to recognize and avoid potential dangers in good time.**

1.2.6 Validity of the manual

This manual describes the Ultrasonic Flowmeter USM GT400. The Ultrasonic Flowmeter USM GT400 is only part of a complete system. The manuals of the other components of the system must be observed, too. If you find contradictory instructions, contact RMG and/or the manufacturers of the other components.

Caution

Ensure that the power data of the current connection matches the specifications on the type plate. Observe any applicable national regulations in the country of use. Use cable that is appropriate for the cable fittings (see chapter 8.3 Connecting the device electrically).

Danger

Only work on the equipment if you have the appropriate training and qualifications.

1.2.6.1 Danger during operation

Observe the specifications of the system manufacturer and/or system operator.

1.2.6.2 Dangers of operation in EX areas

Danger

Only use the ultrasonic flowmeter USM GT 400 in its original condition.

- Only operate the USM GT 400 in fault-free and complete condition. If you make technical changes to the device, safe operation can no longer be guaranteed.
- When connecting additional measuring components or additional equipment in explosion-prone areas, ensure that the appropriate explosion protection is provided for these components.
- They are intrinsically safe devices for which galvanic isolation must be provided with connection of these devices.

The USM GT 400 is permitted for operation in Ex Protection Zone 1, but only within the permissible temperature range (*Chapter 13: Technical specifications*).

1.2.6.3 Responsibility of the operator

As the operator, you must ensure that only adequately qualified personnel work on the device. Ensure that all employees who work with the device have read and understood this manual. You are also obligated to train personnel regularly and inform them of the dangers. Ensure that all work on the device is carried out exclusively by qualified persons and inspected by responsible qualified supervisors. The responsibilities for installation, operation, fault rectification, maintenance and cleaning must be clearly regulated. Instruct your personnel with regard to the risks involved with working with the device.

Suitable personal protective equipment must be used for all work on the USM GT400, which you as the operator must provide. This also applies even though all sharp edges on the device have been removed as far as possible.

1.2.7 Transport

The device is packaged specific to the transport requirements for each customer. Ensure safe packaging that absorbs light impact and vibrations is used for any further transport. Nevertheless, inform the transport company that all types of impact and vibrations should be avoided during transport.

The following applies in particular to transport:

- Shocks and vibrations are to be avoided
- Protect the USM GT400 from moisture
- If you suspect improper transport or damage during transport, please contact RMG's service department immediately

Warning

Risk of injury during transport

Any foot screws must be mounted if they are provided as a transport safeguard to prevent rolling and tipping. Additional measures must be taken to ensure that impermissible rolling and tipping are prevented.

Only use the provided lifting eyes / ring screws to lift the meter. Please observe the relevant permissible loads for the lifting equipment. Prior to lifting, ensure that the load is securely fastened. Do not stand under suspended loads.

The device can slip, topple over or fall down when being lifted and set down. The device can fall over if the bearing capacity of the lifting equipment is disregarded. There is a risk of severe injury for nearby persons.

If the device is delivered on a Euro pallet, the device can be transported on the pallet using a pallet truck or forklift.

The gas meters and accessories must be protected from jarring and vibrations during transport.

The gas meters or any inlet/outlet pieces have a flange as an end piece. The flanges are sealed with a protective sticker or fitted with a plastic dummy plug. The protective stickers and/or dummy plugs must be removed without leaving any residue prior to installation in the pipeline. Residue from this film changes the flow and causes measuring errors!

This protection must be re-applied to the flanges for transport or storage of the device.

1.2.8 Scope of delivery

The scope of delivery can differ depending on the optional orders. The following is "normally" included in the scope of delivery:

Part	Quantity
Ultrasonic Flowmeter USM GT400	1
Manual	1
Test log	1
Calibration certificate	1
Material test certificate	1
Strength test certificate 3.1	optional

1.2.9 Disposal of packaging material

Dispose of the material in an environmentally friendly manner in accordance with national standards and directives.

1.2.10 Storage

Avoid extended periods of storage. After storage, inspect the device for damage and test for correct function. Contact the RMG service department to arrange for inspection of the device after a storage period of longer than one year. For this purpose, return the device to RMG.

If storage is nevertheless necessary, the following must be observed:

- Storage must take place in a dry and protected room.
- It must be ensured that all open pipes are sealed.

1.3 Explosion-proof design

1.3.1 General information

Danger

The USM GT400 is permitted for installation in explosion-prone areas in Zone 1 that are endangered by gas and vapor assigned to explosion group IIB+H_2 and temperature class T6.

ATEX – Zulassungsnummer: BVS 14 ATEX E 034 X

Code: **2G Ex de IIB+H_2 T6 Gb**

The device conforms to the requirements of Directive 94/9/EC.

The applicable regulations must always be observed during installation and operation. The device is approved for operation in hazardous areas. The permitted electrical data can be found in chapter *8.3* Connecting the device electrically.

Danger

Risk of destruction by body electricity, e.g. due to friction of clothing - appropriate protective clothing must be worn.

Notice

During installation, it must be ensured that the enclosure protection class is observed. Direct sunlight must be avoided.

The USM GT400 complies with protection class IP66 due to EN 60529.

Temperature range

MID:

-20°C bis +55°C (Umgebungstemperatur, für eichamtliche Messung)

Nach ATEX:

-40°C bis +80°C

Notice

In case of doubt, the limited range of the MID applies: -25°C to +55°C (optional -40° bis +55°C)

1.4 Inspection and maintenance work

1.4.1 General information

Explosion-proof electrical control units must be regularly maintenanced. The time intervals of this maintenance depend on the operating and environmental conditions.

Notice

We recommend at least one check per year (e.g. in connection with the annual calibration).

This chapter provides information on how you can extend the service life of the device through maintenance. You can only protect the device from premature wear if you adhere to the maintenance interval described here.

Danger

Work on live electrical equipment is generally prohibited in hazardous areas (except for intrinsically safe circuits).

In special cases, work can also be carried out on live electrical equipment in hazardous areas if it is ensured that no potentially explosive atmosphere is present. This may only be done with explosion-proof, approved measuring instruments.

Danger

If access to electrical modules is necessary, the following precautions must be taken:

- **The entire device must be disconnected from the power supply.**
- **When working with electronic assemblies, a connection must be established between an earthed object and the body.**

Notice

Pay attention to accumulation of water in the housing, because the explosion-proof housing is only conditionally protected from water by the gap protecting against ignition sparks (IP54).

Rusted or corroded gaps must not be cleaned with grinding materials or wire brushes; chemical means must be used, such as reducing oils. Then acid-free anti-corrosive agents, such as ESSO RUST BAN 397, Mobil Oil Tecrex 39 or equivalent products must be applied to the gaps for protection.

Danger

The seal for the Ex-e housing must be inspected for damage and replaced as necessary.

Check cable connections and sealing plugs for tight seating.

Damage to the housing can negate the Ex protection!

If the device is repaired regarding a part which depends on explosion protection, it may only be put back into operation after it has been checked by a certified expert (*section 1.2.4.4 Qualifikation*).

If repairs are carried out by RMG service, no acceptance by an expert is required.

2 Quick guide

This chapter does not replace the rest of the operating instructions. It shows only a brief section of the steps necessary in order to make the device ready for operation.

The chapter is only directed at experienced users.

- Observe the chapter safety.
  ⇨ *Section 5, “Safety” on page 53*

Detailed information for this content can be found under:

⇨ *Section 7, “Construction and Planning” on page 81*
⇨ *Section 8, “Installation” on page 95*
⇨ *Section 9, “Start Up” on page 132*
⇨ *Section 12.4, “Troubleshooting” 175*

⚠ Danger

This chapter is only intended for experienced users!

It does not replace all safety instructions that are primarily listed in the first part of the manual but can also be found in the remaining chapters.

Moreover, use of this chapter “Quick guide” requires that the experienced user is familiar with all of these safety instructions and implements them when working with the device.

RMG rejects liability for any damage to the device or other connected devices if a user disregards even one of the safety notices in the overall manual because of this chapter “Quick guide”. This also applies to safety instructions to which reference was only made in this manual but were not explicitly listed.

2.1 Mechanical connection

2.1.1 Connection flanges

1 Make sure that the device and the connection flange have the same pressure rating / flange standards.
2 Make sure that the device is sealed with the appropriate seals.

2.1.2 Inlet / outlet piping

Operating mode	Inlet piping	Outlet piping	Temperature sensor position
Unidirectional operation	10 D (no flow conditioner)	3 D	1,5 D to 5 D
Unidirectional operation	3 / 5 D (with RMG or standardized flow conditioner)[1]	3 D	1,5 D to 5 D
Bidirectional operation	10 D (no flow conditioner)	10 D (no flow conditioner)	3 D to 5 D
Bidirectional operation	3 / 5 D (with RMG or standardized flow conditioner)[1]	3 / 5 D (with RMG or standardized flow conditioner)[1]	2 D zo 5 D[1]

[1] Depending on the nominal width.

See also “Inner diameter of connecting spool pieces” on page 189

2.1.3 Joining pressure connections

■ **Establish connection with the clamping screw connection.**

3 Unscrew the union nut of the clamping screw connection.
4 Remove the blind plug.
5 Push the union nut and clamping rings onto the pipe.
6 Push the pipe into the clamping screw connection until the stop.
7 Tighten the union nut in order to fix and seal the pipe.

■ **Establish connection with the female thread.**

8 Unscrew the blind plug.
9 Seal the connection in the thread.

2.2 Electrical connection

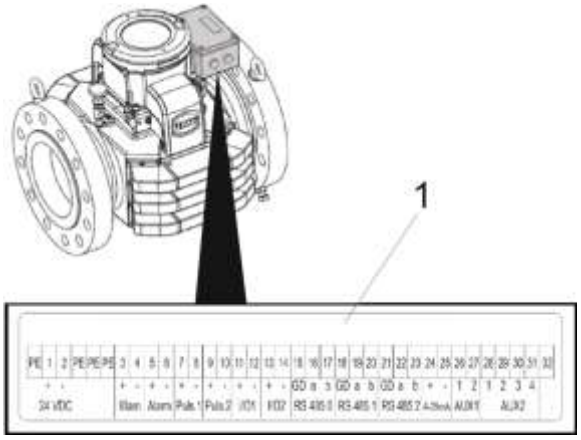

1 Terminal Connections

Fig. 2.1: Connection assignment on the terminal strip

10 Connect the computer to the terminals **RS 485-0**.

11 Allocate the terminal strips according to the applications.
Option: connect ERZ 2000 (-NG) to **RS 485-1**.

You find recommended cable types in the chapter *8.3 Connecting the device electrically*.

2.3 Start up

12 Supply the device with power supply (24 V DC) via the system.

If the power LED illuminates green permanently, the device is ready for operation.

If the alarm and warning LED do not flash, the device operates trouble-free.

⇨ *Section 3.2, "Light emitting diodes" on page 30*

The USM-GT-400 is supplied without connection box to the North American region, the connection is made to cables that are led through a flame arrester. The marking of the cable (numbers) is (always) identical to the terminal assignment.

2.4 Earthing

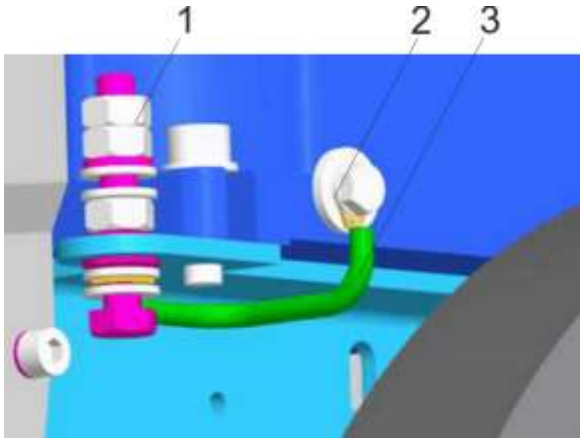

1 Earthing screw M6
2 Earthing screw M6
3 Earthing cable

Fig. 2.2: Earthing – Ultrasonic gas meters DN100 (4”) and DN150 (6”)

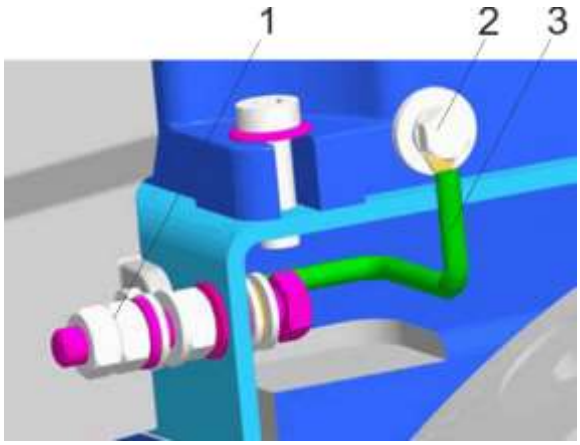

1 Earthing screw M6
2 Earthing screw M6
3 Earthing cable

Fig. 2.3: Earthing – Ultrasonic gas meters ≥ DN200 (8”)

13 Connect the earthing cable according to the ultrasonic gas meter version DN100 (4") to DN150 (6") or from DN200 (8").

2.5 Parameter setting

The device shall be supplied pre-assembled according to customer agreement. Changes to the pre-assembly are more extensive and are therefore not described in this brief instruction. If this should be necessary, you will then find the description:

⇨ *Section 10.1.3, “Calibration and Service Switch” on page 136*

3 Device overview

In this chapter you will receive information on the main components of the ultrasonic gas meter and the arrangement of the ultrasonic transducers in the housing of the ultrasonic gas meter.

Content

3.1	**Main components**	**25**
3.2	**Ultrasonic electronics**	**27**
3.3	**Arrangement of the ultrasonic transducers**	**31**

3.1 Main components

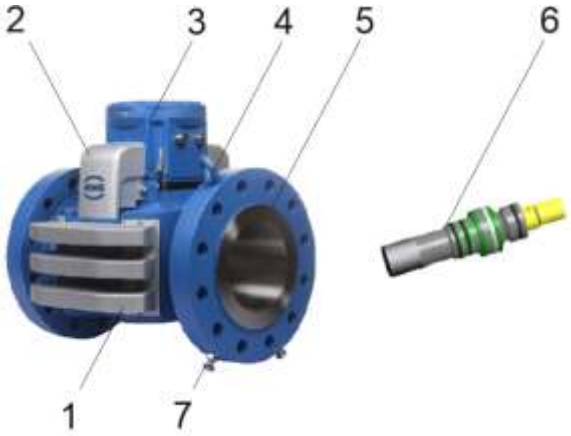

1 Covers of the transducer and transducer lines
2 Covers of the transducer
3 Ultrasonic electronics
4 Lifting eyes
5 Joining flanges
6 Transducer
7 Retaining bolts

Fig. 3.1: Main components of the ultrasonic gas meter

The ultrasonic gas meter consists of the following main components:

Covers of the transducers (1 and 2)

The covers protect the connections and the lines of the transducer (TD) against contamination and mechanical damage.

Ultrasonic electronics (3)

The ultrasonic electronics is in a pressure tight, encapsulated housing mounted on the ultrasonic gas meter. The ultrasonic electronics evaluates the data recorded by the transducers. In addition to the display, the parameters can be shown and evaluated on a computer using the RMGViewUSM software.

Lifting eyes (4)

The lifting eyes can be used to safely transport the device using a suitable lifting gear.

Connection flange (5)

The device is bolted onto the gas line using the connection flanges.

Transducer (6)

The transducers are installed in the housing of the ultrasonic gas meter and are not visible once installed.

Retaining bolts (7)

The retaining bolts are mounted when delivering the device. The retaining bolts secure the product from tipping over or rolling away. The bolts must be mounted to ensure for a safe installation or de-installation.

3.2 Ultrasonic electronics

1 Service- and calibration switch
2 Control panel
3 Display
4 Magnet for operation
5 Cover with viewing window
6 Pressure tight housing

Fig. 3.2: Ultrasonic electronics and display

Device data (readings and parameters) can be set and evaluated via the display and the operating elements.
Moreover, the device data (readings and parameters) can also be shown, evaluated and set using the RMGViewUSM software.

Service and calibration switch (1)

The service switch (right switch) is only for RMG service. The service switch is, e.g., used to install new firmware.
The calibration switch (left switch) protects the parameters against unauthorized changes. The device can be configured by opening the calibration switch.

Control panel (2)

The control field comprises buttons that are triggered by pressing a button or magnetically. Parameters, readings, warning, alarm and status messages are called up using the button.

Display (3)

The display shows the readings, warning, alarm and status messages as well as the parameters.

Magnet for operation (4)

The magnet is used to operate the control panel of the ultrasonic electronics when the housing is closed. If the magnet is placed above the symbol on the viewing window, this function is activated.

Cover with viewing window and pressure tight housing (5 and 6)

The cover and the pressure tight housing encapsulate the ultrasonic electronics against the potentially explosive atmosphere.
During operation, information can be read through the viewing window from the display and status indicators of the LEDs.

Electrical connection (Terminal strip)

More information on the electrical connection can be found here:

⇨ *Chapter 8.3, „Connecting the device electrically“ on page 103*

Display screen

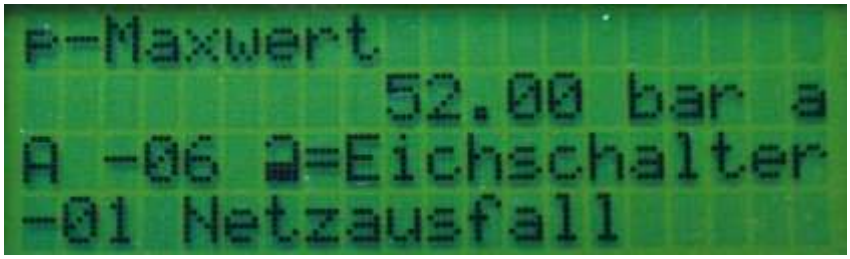

Fig. 3.3: Ultrasonic electronics display

First line

Shows the name of the parameter (coordinates) called-up, e.g., p-maximum value (maximum pressure value).

Second line

Shows the value of the parameter (coordinates) called-up, e.g., 52.00 bar a.

Third line

Shows the coordinate designation, e.g., A-06, thus column A, line 06.

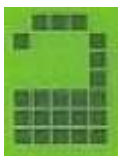

The calibration switch is open. The value of the parameter can be changed.

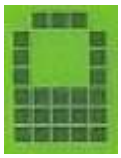

The calibration switch is closed. The value of the parameter cannot be changed.

Forth line

Shows the warning, alarm and status messages, e.g., -01 power failure.

Buttons

When the cover is closed, the buttons can be operated through the glass using the magnet supplied. The cover must not be opened.

Change to the columns. Jump, e.g., from A to B and back again.

When holding for a longer time, you can change the columns by quickly scrolling back.

When holding for a longer time, you can change the columns by quickly scrolling back.
When holding for a longer time, you can change the lines quickly scrolling forward.

Change or scroll back in the lines step by step, e.g., from A-01 to A-02.

When holding for a longer time, you can change the lines with quick return.

Enter values.

Reset button

1 The reset button **(1)** is for RMG service only. If the reset button is pressed, the ultrasonic electronics is restarted.

Switches

1 Calibration switch: Activate to change parameters.
2 Service switch: For RMG service only. For installing a new firmware.

Light emitting diodes

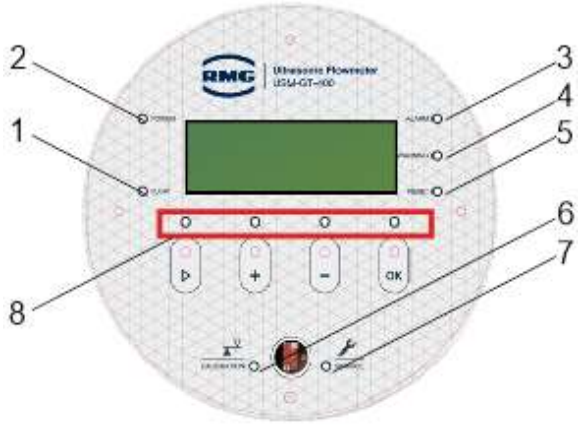

1	Flow	6	Calibration (calibration switch state)
2	Power		
3	Alarm	7	Service (service switch state)
4	Warning		
5	Reset	8	Button states

Fig. 3.4: LEDs of the electronic ultrasonic electronics

LED	Illuminates continuously	flashing
Power	Voltage supply is switched on	---
Flow	Gas flow present.	---
Alarm	Alarm message is stored.	Alarm is active.
Warning	Warning message is stored.	Warning is active.
Reset	Reset is running.	---
Calibration	Calibration switch is open.	---
Service	Service switch is open.	---
Control panel	Panel is being pressed.	---

3.3 Arrangement of the ultrasonic transducers

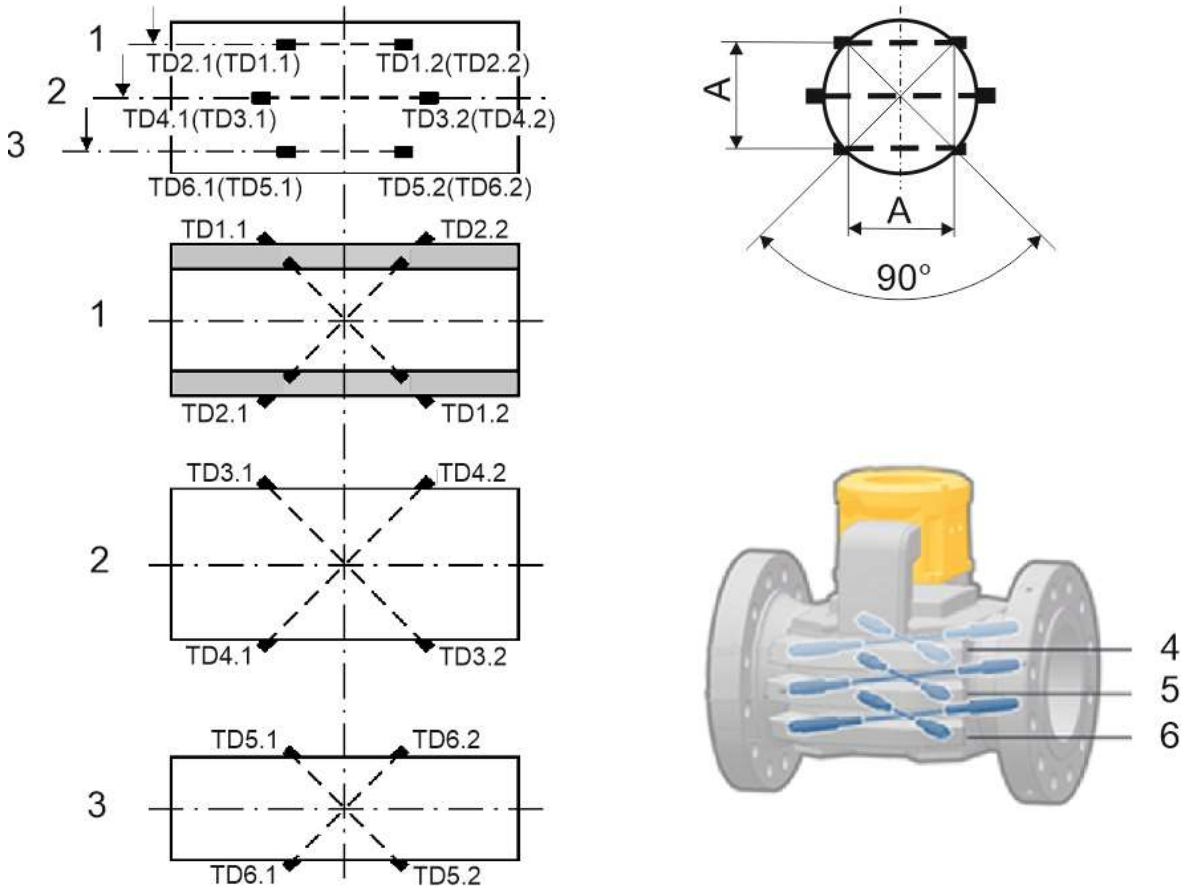

1	Level 1
2	Level 2
3	Level 3
4	Path 1 and 2
5	Path 3 and 4
6	Path 5 and 6

Fig. 3.5: Transducer paths and levels of the ultrasconic gas meter

The figure shows the arrangement of the transducers that are located in the ultrasonic gas meter. The arrangement of the transducers in the three levels is shown in three section representations.

Four transducers are installed per level. The transducers form two paths per level for the measurement.

4 Functional principle – Ultrasonic-flow measurement

Content

4.1 General description 33

4.2 Correction of the base line 37

4.2.1 Base line correction via polynomial 38

4.2.2 Correction via a piecewise linearization 39

4.3 Diagnostic function Speed of Sound 40

4.3.1 Standard method of SoS calculation 40

4.3.2 SoS calculation via gas components 40

4.3.3 Extended SoS calculation 41

4.4 Import of gas composition data 42

4.4.1 Option 4: Data input on fixed defaults 43

4.4.2 Data input on fixed defaults for air 43

4.4.3 Data input via RMGBus 45

4.4.4 Data via Modbus (USM GT400 is SLAVE) 46

4.4.5 Import of data via Modbus (USM GT400 is Master) 47

4.54.5 Batch modeBatch mode 52

4.1 General description

In this chapter, you are provided with information as to how the ultrasonic gas meter records the data. The necessary formulas are listed for this purpose.

Figure 4.1 shows the general working principle. Transducer TD1 and TD2 are positioned opposite to each other for the measurement and form a measurement path with distance L. An ultrasonic pulse travels along the measuring path from sensor TD1 to transducer TD2 more quickly than the other way around. This is caused physically by vector addition of the flow velocity to the speed of sound, the arrow above the $\bar{v}$ shows the direction of flow.

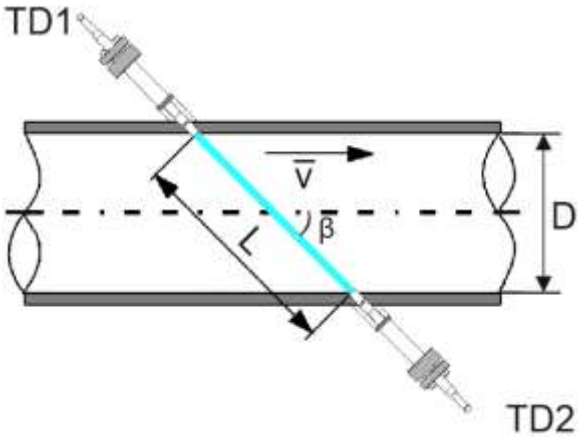

Fig. 4.1: Two sensors form one path for the measurement

The transit time from TD1 to TD2 (:= t_{TD12}) and from TD2 to TD1 (:= t_{TD21}) re calculated according to the following formula:

Formulas

$$t_{TD12} = \frac{L}{c_0 + \bar{v} \cdot cos\beta} \qquad t_{TD21} = \frac{L}{c_0 + \bar{v} \cdot cos\beta}$$

These transit times of the ultrasonic pulses are determined by the electronic ultrasonic system. These are used to determine the average velocity $\bar{v}$ along the measuring path:

Formula, average path velocity

$$\bar{v} = \frac{L}{2 \cdot cos\beta} \cdot \left(\frac{1}{t_{TD12}} - \frac{1}{t_{TD21}}\right)$$

$$\bar{v} = \frac{L^2}{2 \cdot d} \cdot \frac{t_{TD21} - t_{TD12}}{t_{TD12} \cdot t_{TD21}} = \frac{L^2}{2 \cdot d} \cdot \frac{\Delta t}{t_{TD12} \cdot t_{TD21}}$$

Legend

$\bar{v}$	Average flow velocity
c_0	Speed of sound
β.	Path angle to the pipe
L:	Path length
d:	Diameter D (For a center path. Outer paths have a corresponding value.)

For this calculation, it is important that only the transit times and the device parameters such as the transducer distance and the angle of the measuring path to the flow direction are required. All parameters that include a gas dependency are omitted.

In order to consider the average flow profile, in particular an asymmetrical or swirl-affected flow, a total of 6 paths is measured in 3 levels with the USM-GT-400 ultrasonic gas meter. The 3 levels can be derived mathematically via an integration procedure, the so-called Gauss integration.

⇨ *„Arrangement of the ultrasonic transducers" on page 33*

The respective average path velocities (designated with $v_i = \bar{v}_i$ for the respective measuring path i) along these measuring paths results analogically to the formula above.

Under certain conditions such as, e.g., smaller deviations from the tolerances during the production, it may be necessary to correct the path velocities with a common factor:

$$v_{ki} = k \quad v_i$$

Legend

v_{ki}	=	Corrected path velocity	(m/s)
k	=	Correction factor for the path velocities (This factor is named vw factor d1 for the forward direction and vw factor d2 for back-flow; see parameter list)	

Thus, one obtains for the average flow velocity:

$$v_w = \sum_{i=1}^{v} w_i \cdot v_{ki}$$

Flow velocity

Legend

v_w	=	Average flow velocity	(m/s)
w_i	=	Weighting factor with regard to the flow profile	

The summation and the weighting specified result from the mathematic Gaussian integration procedure.

Quality of installation

The USM-GT-400 provides parameters that allow a rating of the installation. If the values are within given ranges, then good measurement conditions can be assumed. If the values are outside the accuracy of the reading may be affected by disturbed flow conditions. Please contact in this case the RMG service.

⇨ *"Manufacturer" on page I*

Turbulence

Due to the actual flow, in particular the turbulence, there will be characteristic variations (variance σ_i) of the individual path velocities (i = 1..6; number of ultrasonic measuring paths), which allow an assessment of the installation. The ultrasonic path averaged turbulence (Tu_i) is calculated as follows:

$$\sigma_i = \sqrt{\frac{1}{N-1}\sum_{j=1}^{N}(v_{j,i} - \bar{v}_i)^2} \qquad \wedge\, i = 1..6; N = 20$$

Variance

$$Tu_i = \frac{\sigma_i}{\bar{v}_i}$$

Turbulence

Legend

$\bar{v}_i$	=	Time averaged flow velocity along the ultrasonic path
$\bar{v}_{j,i}$	=	Flow velocity along the ultrasonic path
N	=	N = number of measured values according to parameter E-9 “moving average cnt”. For a significant determination of turbulence, the number should be at least 10.

Typical values at very good flow conditions for middle paths are at 2-3%, for the outer paths, the turbulence increases to 4%. If these values are above 10%, then disturbed conditions can be assumed affecting the measurement accuracy. At lowest velocities the turbulence calculation is switched off.

Profile and symmetry factor

For a fully developed flow the middle path (3 + 4) have the highest velocity, the two outer paths (1 + 2; 5 + 6) are more or less equal. The profile factor (*PF*) is typically between 1.05 to 1.20; at values below 1.00 or above 1.50, the flow conditions should be checked.

$$PF = \frac{2(\bar{v}_3 + \bar{v}_4)}{(v_1 + \bar{v}_2) + (\bar{v}_5 + \bar{v}_6)}$$

Profile factor

The symmetry factor (*SY*) usually is between 0.9-1.10; at values below 0.75 or above 1.25 the flow conditions should be checked.

$$SY = \frac{(\bar{v}_5 + \bar{v}_6)}{(v_1 + \bar{v}_2)}$$

Symmetry factor

Meter performance

This value (*MP*) indicates whether the velocity of all ultrasonic paths could be measured and involved in the flow calculation. It is calculated on base of the last 20 measurements (same as turbulence).

$$MP = \frac{\sum_{1..100} \sum_{i=1..6} 1(\wedge v_{j,i} = ok) \vee 0(\wedge v_{j,i} \neq ok)}{600}$$

The highest value is 100%; under normal conditions it is above 95%. Since 2 measurement paths can fail before the USM-GT-400 loses its calibrated accuracy, the value may drop down to 66%; if the path failure is caused by a defect transducer
an immediate repair of the failed transducers should be initiated.

All of these values are given at the display of the USM-GT-400; they are identical to the values in the RMGView^{USM}.

4.2 Correction of the base line

Correction of the baseline for the velocity
There are several influences (e.g. Reynolds number) resulting in a not exactly proportional relation between the measured and according to the formula 4.5 calculated mean velocity to the exact mean velocity. Here the following correction helps to compensate these variations:

Formula, corrected average flow velocity

$$v_{wk} = v_w \cdot K_v \cdot \left(1 + \frac{F}{100}\right)$$

Legend

v_{wk}	=	Corrected average flow velocity	(m/s)
K_v	=	Meter factor	
F	=	Error from the characteristic curve correction	

These values can be used to calculate the process volume flow rate respectively the corrected process volume flow:

Formula, process volume flow

$$Q_m = v_w \cdot \pi \cdot \frac{D_i^2}{4} \cdot 3600 \cdot \frac{s}{h}$$

Formula, corrected process volume flow

$$Q_{mk} = k_k \cdot v_{wk} \cdot \pi \cdot \frac{D_i^2}{4} \cdot 3600 \cdot \frac{s}{h}$$

Legend

Q_{mk}	=	Corrected process volume flow	
v_{wk}	=	Corrected weighted flow velocity	
D_i	=	Inside pipe diameter	
K_k	=	Characteristic curve correction	

A 4th degree polynomial permits the so-called basic correction of the device:

4.2.1 Base line correction via polynomial

Formula - Basic correction of the device

$$F_1 = \frac{Konst - G_{m2}}{v_w^2} + \frac{Konst - G_{m1}}{v_w^2} + Konst - G_0 + (Konst - G_1) \cdot v_w + (Konst - G_2) \cdot v_w^2$$

Legend

F_1	=	Deviation of the error curve	(%)
v_w	=	Average flow velocity	(m/s)
$const\text{-}G_x$	=	Constants of the basic correction (x=m2, m1, 0, 1, 2)	

The constants const-Gx (x = m2, m1, 0, 1, 2) are calculated from the measured value pairs of the deviation with the respective flow velocity. The calculated correction F1 is used for the corrected average flow velocity for F in the formula above.

Formula, corrected meter factor

$$v_{wk} = v_w \cdot K_v \cdot \left(1 + \frac{F}{100}\right) \rightarrow v_w = v_w \cdot K_v \cdot \left(1 + \frac{F_1}{100}\right)$$

The process volume flow and the corrected process volume flow result, as listed above, from the multiplication of the corresponding velocities with the pipe cross-section. The correction formulas above are therefore accordingly easy to transfer to the volume flows.

Polynomial

The characteristic curve correction is also carried out via a 4th degree polynomial that represents the error curve of the device.

Formula error equation

$$F_2 = \frac{const - m2}{Q_b^2} + \frac{const - m1}{Q_b} + const - 0 + (const - 1) \cdot Q_b + (const - 2) \cdot Q_b^2$$

Legend

F_2	=	Deviation from the error curve	(%)
Q_b	=	Flow	(m/s)
const-n	=	Constants	

The constants Konst-n (n = m2 bis n = 2) are calculated from the measured value pairs error F_{2i} and flow Q_{bi}. The characteristic curve correction K_k is used for further calculation of the corrected process volume flow.

Formula characteristic curve correction

$$K_k = \left(1 + \frac{1 + F_2}{100}\right)$$

4.2.2 Correction via a piecewise linearization

The correction of the base line with a polynomial described in section 4.2.1 takes into account the typical, characteristic curve of the USM-GT-400 in an ideal way. This correction is recommended for custody transfer metering in all countries where the MID is valid. Nevertheless, a comparable accuracy can be achieved with a piecewise linearization, if a sufficient number of interpolation points are used. Between the interpolation points, a simple linear interpolation is used. The correction of the base line with the piecewise linearization may also be used in all countries where the MID is valid if the error curve of the raw data meets the requirements of the ISO 17089.

In order to achieve a sufficient accuracy most of the measuring points should be placed in the relevant flow rate range. To take into account the higher gradient of the curve at lower flow rates the intervals should not be equidistant; recommended are more
points in this lower flow rate range.

4.3 Diagnostic function Speed of Sound

The USM-GT-400 can calculate the SoS in 3 different ways.

4.3.1 Standard method of SoS calculation

The first calculation is realized with help of the transit time t_{TD12} and t_{TD12} of the ultrasonic pulses (see above) along the measuring path with the length L . It is straight forward to result in the speed of sound SoS or c_0 to:

Calculation of SoS

$$SoS = c_0 = \frac{L}{2} \cdot \frac{t_{TD12}+t_{TD21}}{t_{TD12} \cdot t_{TD21}}$$

This first option is pretty fast and is almost permanently "online" available.

4.3.2 SoS calculation via gas components

The second version of SoS calculation uses pressure, temperature and composition of the gas to determine the SoS according to the specifications of the AGA 10 standard (AGA Report No. 10, Speed of Sound in Natural Gas and Other Related Hydrocarbon Gases; January 2003; AGA - American Gas Association). The calculation is based on statistical considerations of thermodynamics; since it is very complex, it will not be presented here. Knowing the gas composition precisely values such as density, sound velocity and other gas properties can be calculated with very high accuracy.
Depending on the type of gas analyzer it may take 5-10 minutes to determine the volume fractions of the individual gas components accurately. Accordingly, the precise allocation of flow to the gas composition can be done in this time frame only.

Diagnostic function SoS
The USM-GT-400 determines with highest accuracy the flow rate of the gas flowing through it. For the payoff the gas quality, respectively the calorific value of the gas resulting from the gas composition is of course of big interest, too. The USM-GT-400 allows a second billing of the volume flow rate with the "right" gas composition, ie the "right" calorific value.
This temporal resolution can be achieved receiving permanently the gas composition data from a gas analyzer. A comparison of the two differently calculated SoS‘s in the USM-GT-400 allows the immediate detection of any deviation; in particular, another gas composition results in a different SoS. A confirmation of another gas composition then provides the next comparison with the data of the gas analysis instrument.

The temporal correlation of the actual gas composition (using the SoS calculated via the gas composition) to the SoS using method 1 results in the higher temporal resolution for the gas composition, respectively the calorific value.

4.3.3 Extended SoS calculation

The third possibility SoS calculation is presented under the name "**Extended SoS measurement**". This new method is introduced as an additional determination.

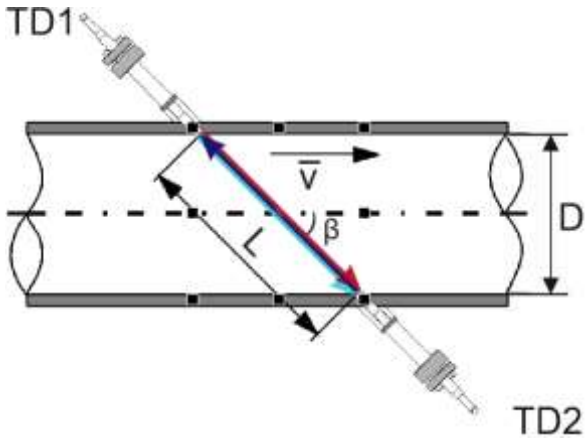

Fig. 4.2: Extended SoS calculation

Transducer TD2 receives at first the ultrasonic pulse (light blue) coming from TD1 at the time (t_{TD12}). This pulse is partially reflected and moves back to TD1 (dark blue). There this pulse is reflected, too and reaches TD2 (red) again after the time ($t_{TD12\ 21\ 12}$). The differences of $t_{TD12\ 21\ 12}$ and t_{TD12} results in a new possibility to calculate SoS:

Calculation of extended SoS

$$SoS = c_0 = \frac{L}{2} \cdot \frac{t_{TD12}+t_{TD21}}{t_{TD12} \cdot t_{TD21}} = \frac{L}{2} \cdot \frac{(t_{TD12\ 21\ 12}-t_{TD12})}{t_{TD12} \cdot (t_{TD12\ 21\ 12}-2 \cdot t_{TD12})}$$

Due to a 10-times smaller variance of the SoS calculation this method offers significantly more accurate result compared to the standard method (version 1). There are 2 reasons for this result; first, the transmitter / receiver error is eliminated (especially T_W; the transit time of the pulse in electronic and transducer is different in the individual transducers) and secondly, any flow turbulence in medium has lowest influence to the transit time (the time interval between t_{TD12} and t_{TD21} is as short

as possible). Having typical measuring conditions, this method can easily be applied, but there are conditions at which this method may fail.

The SoS calculation according to method 1 and 3 run simultaneously and controlled using the same criteria. If correct, the result of the extended measurement is preferred due to its higher accuracy. Otherwise, the standard method 1 is used; after any change the measurement conditions, both methods are revalued again. If correct the extended SoS calculation will be chosen again.

T_W-setting
Measurement tolerances and/or errors of the standard method are permanently controlled using the comparison with the expanded method. Having both values a correction for T_W can be determined. When the calibration switch is open, the T_W-value of the standard measurement can be corrected to the value of the extended measurement. This is an important adjustment help in case of a transducer replaced, but also serves as an accurate path lengths determination between the transducers during the dry calibration.

4.4 Import of gas composition data

To use the diagnostic function SoS, respectively to calculate it from the gas composition the USM-GT-400 requires the volume fractions of the individual gas components in the gas (up to 21 components), the pressure and the temperature. From these data SoS is calculated using the guidelines of the AGA 10 standard. For the data transfer of the gas components four options are available:

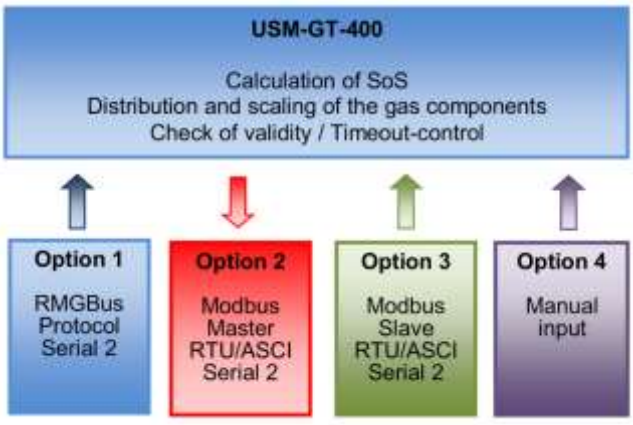

Fig. 4.3: Import of gas composition data

4.4.1 Option 4: Data input on fixed defaults

If there are no live data available for the gas analysis, then the gas data can be stored as fixed values in the USM-GT-400. For the AGA-10 calculation these default values are used as fixed gas shares (**AX-20 - AX-44**; in chapter 10 the matrix notation of parameters, measured values and variables will be explained). To change these values, they have to be confirmed by selecting “Accept new Comp.” in parameters **AX-11** and to be confirmed in “takeover gas components”. Only then they will be taken over as new values for the AGA-10 calculation.

1. Parameter AX-01 “AGA-10 Source”
   Default data
2. Setting of the default values of the individual gas components
   Parameter **AX-20** to **AX-44**
   Methane default value ....
   ....
   Propene default value
3. Takeover with parameter **AX-11** “AGA-10 Source”
   “Taking over new components”

4.4.2 Data input on fixed defaults for air

In mode “default air” fixed values of air composition for the gas analysis can be used. With the additional parameter "rel. humidity" in **AX-06** the water content and component is calculated in mol-% and the remaining components of the air are normalized to 100%. The unnormalized default values for air are:

Nitrogen: 78,105 mol-%

Oxygen: 20,946 mol-%

Argon: 0,916 mol-%

Carbon dioxide: 0,033 mol-%

Water: 0,0 .. mol-% (calculated)

The water content is calculated via the relative humidity.

1. Parameter **AX-01** “SoS source”:

   “Default air”

2. Setting of the default values relative humidity

   Parameter **AX-06 “relative humidity”**

All other possibilities to transmit the volume fractions of the individual gas components on the USM-GT-400, will use interface 2 of the USM-GT-400.

Terminal connections

The following figure shows the terminal connections.

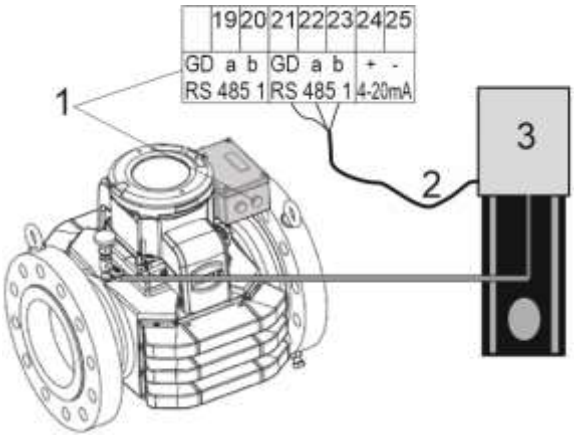

1 Terminal connections
2 COM
3 Gas-Chromatograph

Fig. 4.4: ***Terminal connections***

The SoS calculation depends in addition to the gas components also on the gas pressure and temperature. How to measure the pressure is described in chapter 8.4; temperature measurement is given in chapter 7.4. Setting of the parameters **AX-02** "SoS Source Temp." and **AX-03** "SoS Source Pressure" allows to select whether these measured values of temperature and pressure are used for AGA-10 calculation or default values **AX-04** and **AX-05**.

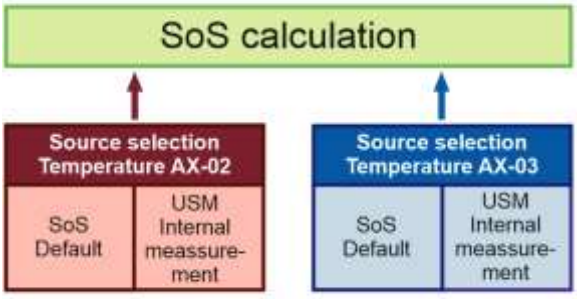

Fig. 4.5: Pressure and Temperature input

The electric connection of pressure (p) and temperature (T) has to be done a terminals 26 to 31; AUX1 = p; AUX2 = T.

4.4.3 Data input via RMGBus

The data of a gas chromatograph (eg. RMG GC9000 or GC9300) can be delivered as RMGBus telegram via the RMGBus protocol. Therefore, the coordinate AX-01 “SoS AGA-10 source data“ is set to "Serial port 2" and the serial interface in the mode "RMG- Bus". Additionally the parameters of the interfaces USM-GT-400 and the RMGBus master device have to be aligned to each other.

Because the content of the telegram may have data from different streams, the „right“ stream has to be set with the parameter AX-09 "Stream selection". Parameter AX-08 "RMGBus mode" fixes how many components are part of the telegram. When using a GC9000 this parameter has to be set to "RMGBus" to offer a correct evaluation for older versions of the software GC9000.

1. Parameter **J-25** "Opt. Ser2 mode":

   "RMGBus"

2. Schnittstellenparameter von Seriell 2 anpassen:

   J-26 „baud“

   J-27 „bits“

   J-28 „parity“

   Match RMGBus master:

   „Serial port 2“

3. Parameter **AX-01** "AGA-10 source“:

   "**Serial port 2"**

4. Parameter **AX-07** "maximum timeout":

   Time in minutes, within which a new telegram has to come via RMGBus

5. Parameter **AX-08** "RMGBus mode":

   GC9000: "RMGBus"

   GC9300: "RMGBus 24 Komp."

6. Parameter **AX-09** "Stream selection":

   Allows the setting of the desired streams.

4.4.4 Data via Modbus (USM GT400 is SLAVE)

The gas data can be written to Modbus USM-GT-400 (USM-GT- 400 is Slave). Data source can be any field devices that operate as a Modbus master on the bus. The individual gas components will be written into the Modbus register of parameters **AY-20** to **AY-44**. To accept these values for the AGA-10 calculation parameters **AX-11** has to be set to "Set new comp.". The parameters will be set as:

1. Parameter **J-25** "Opt. Ser2 mode":

   "Modbus"

2. The parameters of serial port 2 have to be adapted to the setting of the Modbus master:

   J-26 "baud"

   J-27 "bits"

   J-28 "parity"

3. The Modbus has to be set to "RTU" or "ASCII" according to the setting of the master. Due to the configuration of the hardware it has to be set to RS232 or RS485, too:

   J-29 "Modbus-2 protocol"

   J-30 Modbus-2 HW-mode

4. Parameter **AX-01** "AGA-10 source":

   "Serial port 2"

5. Parameter **J-25** "Opt. Ser2 mode":

   "Modbus-Master"

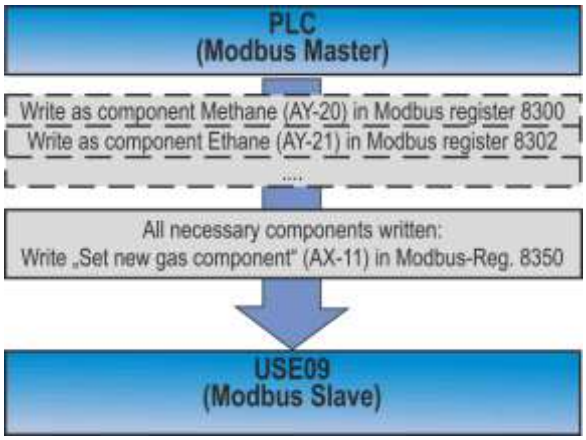

Fig. 4.6: Import of data via Modbus

4.4.5 Import of data via Modbus (USM GT400 is Master)

USM-GT-400 gets the gas data via Modbus. It is Modbus master and asks continuously if new data are available. In this case, all the components are re-read and fed to the AGA-10 calculation. Parameter **AX-10** "Modbus Master Target" sets which device the USM-GT-400 is addressing. If the GC9300 is chosen no Modbus register needs to be set at **AZ-01** to **AZ-54** for status and part of the gas component.

1. Parameter **AX-07** "maximum timeout":

   Time [minutes] in which a new telegram must have come via RMGBus.

2. Adjustment of the parameter of serial port 2

   J-26 "baud"

   J-27 "bits"

   J-28 "parity"

3. Modbus configuration:

   J-29 "Modbus-protocol 2"

   Master has to be set to "RTU" or "ASCII"

   J-30 Modbus-2 HW-mode

   Hardware configuration can be selected as RS232 or RS485

   J-31 "Modbus-address 2"

   Slave-address of the device with the gas data

4. Parameter **AX-01** "AGA-10 source":

   "Serial Port 2"

5. Parameter **AX-07** "maximum timeout":

   Time [minutes] in which a new telegram must have come

Time [minutes] in which a new telegram must have come

Timeout: During the transfer of data, an adjustable time-out is available, generating a status signal if no new data arrived within the adjusted time.

6. Parameter **AX-10**

   "Modbus-Master Target": "GC9300"?

   If yes, continue after 8, otherwise at 7.

7. Parameter **AZ-01** - **AZ-54**

   Enter Modbus registers of the gas components and status of the slave device

Treatment of the gas data

The gas data are validated after transmission and optionally normalized. The AGA-10 gas equation accepts up to 21 gas components; it might even accept up to 24 components adding some (surplus) gas components to other components.

Neo-pentane: added to n-pentane (see ISO 12213-2)

Propene: added to propane

Ethen: added to CO_2 (see ISO 12213-2).

Hexane+: sum of n-hexane, n-heptane, n-octane, n-nonane and n-decane. If there is only hexane+ in the samples and none of the above-mentioned components, then hexane+ is added to hexane. In case one of these components is > 0, then hexane is + ignored.

.

Normalization to 100 mol-%: If the sum of gas components isn‘t 100 mol-%, then the components are normalized to a total of > 100 mol-% (can only be applied if the sum is > 0 mol-% and < 110 mol-%). Otherwise, Bit 0 in **AW-01** "SOS calculation status" will be set and the calculation takes place with 100 mol-% methane instead.

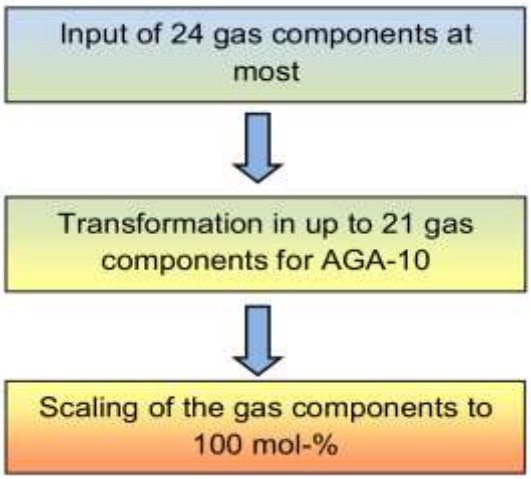

Fig. 4.7: Sequence of gas components treatments

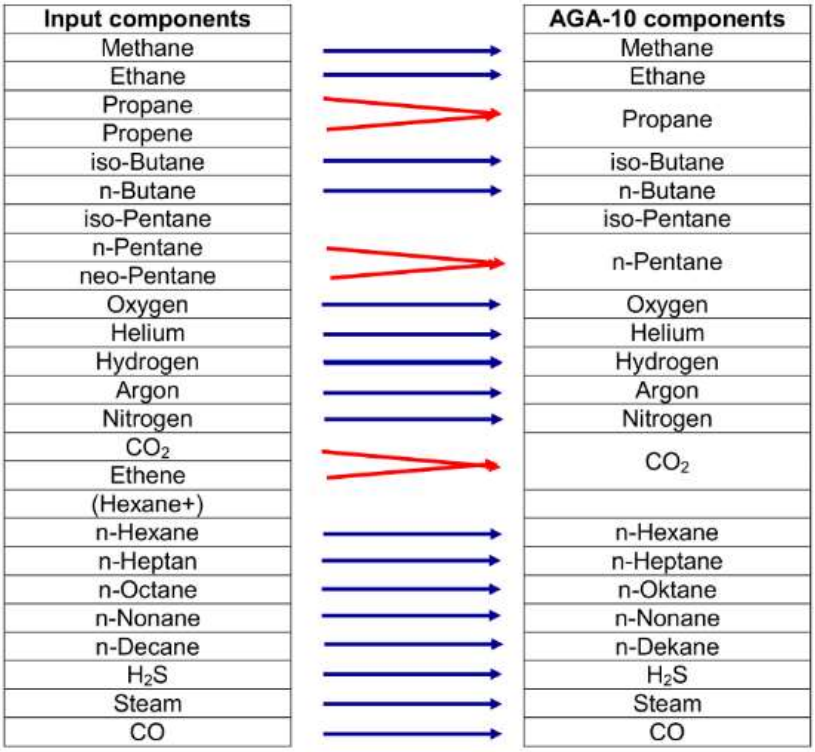

Fig. 4.8: Classification of gas components

The following examples demonstrate the classification of the gas components into the 21 AGA-10 components.

Example 1:

Component	Input mol-%	AGA-10 unnormalized mol-%	AGA-10 normalized mol-%
Methane	35.0	35.0	70.0
Ethane	5.0	5.0	10.0
Propane	1.0	2.0	4.0
Propene	1.0	-	-
iso-Pentane	1.0	-	-
n-Pentane	1.0	2.0	4.0
CO_2	0.2	1.0	2.0
Ethen	0.8	-	-
Hexane+	(5.0)	-	-
Hexane	3.0	3.0	6.0
Nonane	2.0	2.0	4.0
Sum	50.0	50.0	50.0

Example 2:

Component	Input mol-%	AGA-10 unnormalized mol-%	AGA-10 normalized mol-%
Methane	80.0	80.0	80.0
Ethane	5.0	5.0	5.0
Propane	2.0	2.0	2.0
n-Butane	1.0	1.0	1.0
neo-Pentane	1.0	-	-
n-Pentan	0.0	1.0	1.0
CO_2	0.0	2.0	2.0
Ethen	2.0	-	-
Hexane+	5.0	-	-
Hexane	-	5.0	5.0
Nitrogen	4.0	4.0	4.0
Sum	100.0	100.0	100.0

Status code der AGA-10 calculation

Coordinate **AW-01** gives the status code of the AGA-10 calculation. This is a bit-coded value represented as a hexadecimal code. A value of **"0000h"** indicates a AGA-10 calculation with errors. The meaning of the individual bits are:

Bit	Meaning
0	**Components invalid** Sum of the un-normalized gas components is <= 0 or > 110 mol-%
1	**Timeout of new gas data exceeded** Within the defined time period in **AX-07,** no new data arrived. Possible reason: • Time too short • Communication interrupted • transfer register has not been filled (for Modbus slave) • Wrong RMGBus telegram or wrong stream selection If there are new gas components latest within three times of the given timeout time, the error status will be reset.
2	**Temperature Error** The temperature measurement is disturbed. Calculation will be done with the default value.
3	**Pressure errors** The pressure measurement is disturbed. Calculation will be done with the default value.
4	**Simulation active** Parameter E-01 „USE09 mode“ is set to simulation no data (results) of the DSP will be accepted
5	no value
6	no value
7	no value
8	**Error AGA-10 calculation** There is an error within the AGA-10 calculation. The calculation is on hold. Reason may be wrong pressure or temperature values, ...
9-15	no value

The message "188: AGA-10" appears, if the status code is not 0. The Modbus master function is flexible in order to support PGC's other manufacturers, too; for example a Siemens PGC. Activating the RS 485 interface as Modbus master is described in ⇨ *chapter 10.3.3, “Interface 2” on page 150*.

4.5 Batch mode

In general, the USM-GT-400 is set for an optimal operation without disturbance. The setting / changing of the batch mode allows adaptation to disturbed conditions. The setting allows operation at "high-turbulent" flow conditions as well as at "strong background noise" conditions. High turbulent means highly distorted velocity profiles and rapidly changing asymmetries. A "smallest" batch mode should be chosen. At strong background noise, the signal detection can be disturbed, too. A "longer" batch mode increases the signal stability significantly. The number of batches permits a change of the signal duration.

- P1 Number of F-batches per measuring path 1
- ...
- P8 Number of F-batches per measuring path 8

The default values are 2. 0 and 1 are identical; there is no batch activated. All larger values are squared; F-Batch 2 means there are 4 signals superimposed. If the F-Batch is active the ring down time should be chosen as short as possible, preferably to 0 ms. The slow batch mode can be activated in coordinate AI-09; it is to be squared for all paths, too.

4.6 Signal damping

The output signal of the USM can be smoothed using the parameters E-9 (number of GDs) and AK-34 to AP-24 (F-Batch). The choice of the settings for these parameters is an optimization between interference immunity (high damping) and short response time to changes in flow rate (low damping). As standard, the USMs are delivered with GD=10 and F-Batch=2. This means:

a) The output signal is the moving average over the last 10 measurements. The number of measured values included in the moving average is entered directly in E-9.

b) The mean value of 4 raw signals is included in the measurements. The number of these measurements (F-batch) is path-specific and equal to the square of the input value in AK-34 to AP-34.

The shortest possible response time is therefore obtained with E-9 = 1 and AK-34 to AP-34 = 1. However, these settings should only be used with stable flow profiles and low noise levels. If necessary, these parameters must be optimized during commissioning.

5 Safety

In this chapter you will receive information on using the device in a safe manner.

Content

5.1 Intended use 54

5.2 Layout of instructions 55

5.3 Qualification of the personnel 56

5.4 Safety instructions 57

5.4.1 Hazards during transporting 58

5.4.2 Hazards during installation 58

5.4.3 Hazards during start up 60

5.4.4 Hazards during cleaning 61

5.4.5 Hazards during maintenance and repairs 61

5.4.6 Hazards during operation 62

5.4.7 Hazards for operation in potentially explosive environments 63

5.5 Responsibilities of the operator 64

5.1 Intended use

The Ultrasonic Flowmeter USM GT400 device is used to measure the flow velocity of the gases in a pipeline and calculate the operating flow during running operation.

The Ultrasonic Flowmeter USM GT400 is hereafter designated as ultrasonic gas meter or device in the following.

When used for its intended purpose, the ultrasonic gas meter is suitable for use in potentially explosive areas classified as zone 1.

The device complies with ignition protection class

II 2 G Ex de IIB+H2 T6 Gb, ambient temperature between 40°C and +55°C

or

Class 1, Division 1 Group B, C and D, ambient temperature for code T5/T6 is -40°C to +40/+55°C.

The ultrasonic gas meter complies with the standards, directives and guidelines.

⇨ *Chapter 16.5, “Standards, directives and guidelines” on page 247*

These technical limits must be maintained for a safe use of the ultrasonic gas meter:

⇨ *Chapter 13, “Technical specifications” on page 177*

5.2 Layout of instructions

The following instructions are used:

Danger

This warning instruction informs you of potentially hazardous situations that can occur as a result of incorrect operation or human error. If these situations are not avoided, they can lead to fatal or severest injuries.

Warning

This warning instruction informs you of possible hazardous situations that can occur as a result of incorrect operation or human error. If these situations are not avoided, they can lead to fatal or severe injuries.

Caution

This warning instruction informs you of possible hazardous situations that can occur as a result of incorrect operation or human error. If these situations are not avoided, they can lead to slight or minor injuries.

Notice

This warning instruction informs you of potentially hazardous situations that can occur as a result of incorrect operation or human error. If these situations are not avoided, they can result in material damage to the device or the vicinity.

Dieser Hinweis gibt Ihnen Tipps, wie Sie Ihre Arbeit erleichtern können. Zusätzlich erhalten Sie mit diesem Hinweis weitere Informationen zum Gerät oder zum Arbeitsprozess.

5.3 Qualification of the personnel

Operating personnel

The operating personnel are to use and operate the device within the scope of the intended purpose.

Maintenance personnel

Work on the device must only be carried out by specialist personnel that can carry out the respective work assigned to them as a result of their training, knowledge and experience as well as the applicable regulations. These specialist personnel are familiar with the legal guidelines for accident prevention and can evaluate and avoid possible risks by themselves.

- **Mechanical installation** must only be carried out by the respectively qualified specialist personnel.
- **Installation on electrical components** must only be carried out by qualified electricians.

The specialist personnel require a training especially for working in potentially explosive environment.
Specialist personnel are persons that can verify a training / further education according to DIN VDE 0105, IEC 364 or a similar national standards.

- **Initial start up** must only be carried out by especially trained personal (training by RMG) or by service personal from RMG.
- **Maintenance and cleaning** must only be carried out by the respectively qualified specialist personnel.

Danger

Observe the following safety instructions
Non-observance of these safety instructions can lead to a risk of life and limb and health of the person as well as damage to the environment or property damage.

5.4 Safety instructions

Note that the safety instructions in this operating instruction and on the device cannot cover all possible hazardous situations as the combination of different circumstances is impossible to predict. To simply follow the instructions specified may not normally be sufficient enough to ensure for correct operation. Always be observant and also consider the following:

- Before working with the device for the first time, read through this operating instruction and, in particular, follow the safety instructions carefully.
- Always keep the operating instructions within reach for use at the place of installation.
- The operating instruction warns against the residual risks for users, third parties, devices or other material assets. The safety instructions used refer to residual risks that cannot be avoided due to the design.
- For safe operation, the safety instructions must be observed and followed.
- Operate the device only in a sound state and when observing the operating instruction.
- Also observe the local legal accident prevention, installation and assembly
- guidelines.
- The manufacturer is not responsible for any damage that result as a consequence of not observing the operating, instruction.
- Service and maintenance work or repairs that are not described in the operating instruction must not be carried out without previous consultation with the manufacturer.
- Changes to the device are forbidden.
- For safe operation, the technical specifications must be observed and followed. Performance limits must not be exceeded.
- For a safe operation, the device must only be used in the scope of its intended use.

The device is exposed to different life phases, such as, e.g., installation, start upstart up, operation, maintenance and cleaning.

The following sections must be sorted thematically according to the life phases.

5.4.1 Hazards during transporting

The device may be damaged when lifting and putting down, tipping over or falling down. By disregarding the load bearing capacity of the lifting gear, the device may fall. There is a risk of severe injuries for persons in the vicinity.

- Lift the device only on the intended lifting eyes.
- Before lifting, make sure that the load is safely secured.
- Never stand under suspended loads.

Observe the weight specifications for the ultrasonic gas meter at hand.

5.4.2 Hazards during installation

When you carry out work on electric systems in potentially explosive environments, incorrect work may lead to explosions.

- Make sure that no potentially explosive atmosphere is at hand before starting work.

If personnel that have insufficient qualifications carry out work, they can incorrectly assess hazards. Explosions can occur.

- Carry out the work only if you have the respective qualification and are a trained specialist person.
- Carry out the installation according to the following standards:
  - CAN/CSA-C22.2 No. 0-1191
  - CSA C22.2 No. 30
  - CSA C22.2 No. 142
  - UL 916
  - UL 1203

or similar national standards.

In potentially explosive atmospheres, dangerous voltages can still remain as ignition sources for up to one minute after being switched off.

- Disconnect the device from the power supply before starting the maintenance work.
- Securing against reconnection.
- Cordon-off the work area of the device, e.g., using a barrier and signs.
- After switching off the device, wait at least one minute before starting work. Ensure that the device is voltage-free. Then connect to earth and short-circuit.

- Make sure that the insulation of the cables are intact.
- Make sure that no stripped cable is located outside the housing of the ultrasonic electronics and the connection box.

  If the device is not installed according to the operating instruction, then there is not enough explosion protection.

- Install the device according to the operating instruction.

  If you do not use the appropriate tool and material, component may be damaged. The explosion protection is void.

- Use tools that have been recommended for the respective work in the operating instruction.
- Make sure that the performance data of the power connection comply with the specifications of the type plate.
- Use only an Atex or IECEx certified EMC cable screw connection in the protection category increased safety with a metric thread (M20x1.5).
- Creepage distances and clearances must be maintained.
- Openings for line feeds not used must be sealed by impact resistant, anti-self-loosening and twisting safe blind plugs.
- The line insulation must reach to the terminals. When stripping, the conductor itself must not be damaged.
- When closing the housing, take care that the seals remain effective in order to ensure for the protection category IP 66 / NEMA 4X.
- Housing cover or housing with damaged thread must be replaced immediately.
- Observe the applicable national guidelines in the individual countries.
- Use cables that match the cable glands.

Gas may represent a risk to life and limb in different ways. Depending on the gas type, different hazards may have an effect on you with respective consequences. You may experience intoxication and injuries. There is also a risk of explosion.

- Before working, inform yourself about the media in the system.
- Install the device only when the system is switched off, depressurized and secured.
- Make sure that there is no potentially explosive gas mixture at the installation location.

The device is exposed to high pressures. If components under pressure are removed / assembled, the high pressure may escape suddenly causing the component to fly around. Mortal danger!

- Install the device only when the system is depressurized.
- With systems subjected to pressure:
  Have the assembly work (Hot-Tapping) only carried out by specially trained personnel.

If gas escapes at high temperature, there is a risk of life-threatening burns. You may suffer burn injuries in the event of contact with hot surfaces.

- Allow the components to cool down before working in the system.
- Wear personal protective equipment.

If connections not required during operation remain open, gas will escape. Risk of explosion and intoxication!

- Before start up, seal all open connections with certified blind plugs according to 94/9/EC.
- Replace the blind plugs that have been installed for transportation with certified blind plugs according to 94/9/EC or NEC500.

5.4.3 Hazards during start up

If personnel that have insufficient qualifications carry out work, they can incorrectly assess the hazards. Explosions can occur.

- Carry out the work only if you have the respective qualification and are a specialist person.

If the device is not sealed correctly during installation, then gas may escape. Explosions can occur. Danger of poisoning!

- Check the connections for leaks.
- Take the system immediately out of operation if you detect a leak.

5.4.4 Hazards during cleaning

If the device is not cleaned according to the operating instruction, then the device may be damaged.

- Clean the device only according to the operating instruction.

If you do not use the appropriate tool, components may be damaged. The explosion protection is void.

- Use tools that have been recommended for the respective work in the operating instruction.

Cleaning agents / corrosion protection used may be harmful to health.

- Always wear protective gloves and eye protection.
- Ensure for good ventilation and do not inhale vapours!
- Observe the safety data sheet!

5.4.5 Hazards during maintenance and repairs

If personnel that have insufficient qualifications carry out work, they can incorrectly assess hazards when working. Explosions can occur.

- Carry out the work only if you have the respective qualification and are a trained specialist person.

Flange joining elements, pressure tapping screw connections and valves must not be removed if the system is subject to pressure. Components may dangerously spray. Escaping gas may cause intoxication and burns. Risk of explosion!

- For the flange connection, use only the matching combination of screw bolts, nuts and seals. Select the appropriate tightening torque of the flange connection for this combination.
- In doing so, observe the specifications of the system manufacturer or system operator.
- Use only genuine spare parts from RMG.
  It is forbidden to install spare parts from third-party manufacturers. It voids all guarantees and claims for guarantee. The explosion protection is no longer ensured.

  When working on live devices in potentially explosive atmospheres, resulting sparks may lead to an explosion.

- Only work on de-energized devices when in potentially explosive atmospheres (except for intrinsically safe circuits).
- Make sure that there is no potentially explosive atmosphere before starting work.
- After working provide on pressurized components, leaks may occur. Escaping gas may lead to intoxication, Risk of explosion!
- Check all components for leaks!

  Special requirements for a safe operation in potentially explosive areas classified as zone 1:

  Under normal operating conditions, the transducer cannot be accessed from the outside, thus no sparks can result from impacts or friction of the transducer against hard materials.

- The transducers are made from titanium. If objects knock or rub against the transducers, this can generate a spark thus leading to an explosion!
- prevent hard objects from knocking or rubbing against the transducers.

Also observe these warning instructions:

⇨ “Hazards during installation” on page 58

5.4.6 Hazards during operation

If the device is loaded with a pressure that is too high, components may leak and burst.

- Never exceed the maximum operating pressure (see specifications on the type plate).

Flange joining elements, pressure tapping screw connections and valves must not be removed if the system is subject to pressure. Components may dangerously spray. Escaping gas may cause intoxication and burns. Risk of explosion!

- Observe the specifications of the system manufacturer or system operator.

The device can be heated or cooled by the temperature of the gas. You may be subject to burns when making skin contact with the device.

- Wear protective gloves that protect against heat and cold for this work.

Breakages or cracks may be caused to the device if the gas temperature or ambient temperature is outside the specified temperature ranges. Gas escaping may cause intoxication and burns. Risk of explosion!

- Never exceed the maximum gas temperature and / or ambient temperature of 80°C.

5.4.7 Hazards for operation in potentially explosive environments

If the device is operated with damaged or missing components, then gas may escape. In event of damaged threads, the ignition penetration safe gap is no longer guaranteed. Escaping gas may cause intoxication and burns. Risk of explosion!

- Operate the device only in a sound and complete state.

If you carry out technical changes to the device, safe operation can no longer be guaranteed.

- Use the device only in its original state.

5.5 Responsibilities of the operator

- You being the operator must ensure that only sufficiently qualified personnel work on the device.
  ⇨ *“Qualification of the personnel” on page 56*
- Make sure that all employees that are using the device have read and understood this operating instruction. Moreover, you are also obliged to train the personnel at regular intervals and inform them of the hazards.
- Make sure that all work on the device is only carried out by qualified persons and checked by responsible specialist personnel.
- The responsibilities for installation, operation troubleshooting, maintenance and cleaning must be clearly specified.
- Provide the personnel with the necessary protective equipment.

  ⇨ *“Qualification of the personnel” on page 56*

Using suitable measures, ensure that that constructive risks are ruled out when using the device. Inform your personnel about the risks when using the device.

6 Transport and storage

In this chapter you will receive information on the scope of supply, transport and storage of the device.

Content

6.1	**Transport**	**66**
6.1.1	Scope of supply	66
6.1.2	Transporting the device	67
6.1.3	Unpacking the device	67
6.1.4	Disposal of packaging material	70
6.1.5	Prior to installation	70
6.1.6	Removing the transporting locks	71
6.2	**Packing the device for transportation**	**73**
6.3	**Storage**	**79**
6.3.1	Packing the device for storage	79
6.3.2	Checking the device after storage	80

6.1 Transport

The device will be packed to customer-specifics according to the transport requirements. In this chapter you will receive information on the standard packaging of the device.

6.1.1 Scope of supply

The scope of supply may deviate depending on the options of the orders.

The following are included in the scope of supply:

Component	Quantity
Ultrasonic gas meter USM GT400 (including US-Electronic)	1
Extension box (In countries where ATEX / IECEx standards apply, connected at the ultrasonic electronic)	1
Special tools to open the US electronic	2
Inlet and outlet spool piece	1 (optional)
Certificate of flow calibration	1
Certificate of material used	1
Certificate of stability	1
Certificate of density	1
Software RMGView^{USM}	1
Operating instruction of the device	1
Screws and set of blank plugs	1

6.1.2 Transporting the device

1 Euro pallet
2 Retaining bolts x 2
3 Ultrasonic gas meter
4 Retaining strap x 2
5 Timber wedge x 2

Fig. 6.1: Device secured on a Euro pallet

The device is as standard supplied on a Euro pallet **(1)**. The device can be protected by a customer-specific outer packaging. To secure the device against tipping-over and rolling away, the device **(3)** is supplied with retaining straps **(4)** and bolted to timber wedges **(5)**. The retaining bolts **(2)** of the device provide additional support.

The device can be transported on the pallet using a lifting cart or a fork lift.

6.1.3 Unpacking the device

Remove the outer packaging

The outer packaging of the device is suited to customer specifics in order to protect the device against damage or influences from the environment during transport.

Options for the outer packaging can be, for example:

- sea-proof wooden crate
- cardboard packagings

1 Remove the outer packing.

2 Recommendation: store the outer packaging for the future or for returning to RMG for service work.

1 Retaining bolts

Fig. 6.2: Retaining bolts of the device

3 Make sure that the retaining bolts (1) are screwed in, if necessary.

- **Removing the device from the pallet**

1 Lifting eyes
2 Lifting gear chains

Fig. 6.3: Attaching the lifting gear

Warning

Risk of injury during transport
The device may be damaged when lifting and putting down, tipping over or falling down. By disregarding the load bearing capacity of the lifting gear, the device may fall. There is a risk of severe injuries for persons in the vicinity.

- Lift the device only on the intended lifting eyes.
- Before lifting, make sure that the load is safely secured.
- Never stand under suspended loads.
- Observe the weight specifications for the ultrasonic gas meter at hand.

1 Attach a suitable lifting gear **(2)** to the lifting eyes **(1)** of the device.
2 Tension the chain of the lifting gear slightly to secure the device.

1 Timber wedge
2 Tension straps

Fig. 6.4: Remove the timber wedges and retaining straps

3 Undo and remove the tension straps (2).

Warnung

Risk of injury during transport
The device may be damaged when lifting and putting down, tipping over or falling down. By disregarding the load bearing capacity of the lifting gear, the device may fall. There is a risk of severe injuries for persons in the vicinity.
- Lift the device only on the intended lifting eyes.
- Before lifting, make sure that the load is safely secured.
- Never stand under suspended loads.
- Observe the weight specifications for the ultrasonic gas meter at hand.

4 Carefully lift the device with a lifting gear until the Euro pallet can be pulled from underneath the device.

5 Pull the Euro pallet from under the device.

6 Recommendation: store the Euro pallet for the future or for returning to RMG for service work.

6.1.4 Disposal of packaging material

If the packaging material and the Euro pallet are no longer required, dispose of the material in an environmentally responsible manner according to the country-specific standards and guidelines.

6.1.5 Prior to installation

The transport locks must only be removed once the device has been installed in the system and the device has been transported to the installation location.

Hinweis

Damage to the device from contamination and humidity
If transport locks are removed too early, contamination and humidity may enter the device. The device could be damaged.

- Disassemble the transport locks immediately before installing the device.

The following belong to the transport locks:

- Blind plug
- Protective sticker
- Retaining bolts
- Recommendation: remove the retaining bolts only if it is absolutely necessary. This is the only way to ensure that the device does not tip over or roll away after being installed.
- Corrosion protection mat

6.1.6 Removing the transporting locks

The removal of the transport locks is described here on the example of a connection or flange. The transport locks also have to be removed from all connections where the transport locks are located.

- Removing the protective sticker / blind plugs from the flanges

  The flanges are supplied sealed with a protective sticker or blind plug made of plastic.

1 Protective sticker
2 Flange

Fig. 6.5: Removing the protective sticker

Removing the protective sticker

1. Release the protective sticker from the sealing surface of the flange.
2. Remove any residual adhesives or other impurities from the sealing surfaces of the flange using a gentle cleaning agent.

Remove the blind plugs

1. Pull the blind plugs out of the openings.

- **Remove the corrosion protection mat**

The inside of the device is protected using a corrosion protection mat. The corrosion protection mat must be removed before installation.

1 Corrosion protection mat

Fig. 6.6: Position of the corrosion protection mat

1 Remove the corrosion protection mat **(1)** from the device.

6.2 Packing the device for transportation

The device must be packed to customer-specifics according to the transport requirements. In this chapter you will receive information as to how the device is as standard packed.

For packaging, use the original packaging material and sealing set that was supplied with the device.

If you no longer have the original packaging material and sealing set, you can order the packaging material and sealing set required from RMG.

RMG service would be pleased to consult you as to how the device should be packed.

You need the following for standard packaging:

- Euro pallet with timber wedges (with the original packaging, the timber wedges are already pre-mounted on the Euro pallet).
- Two tensioning straps
- Transport locks
- Sealing set (blind plugs)
- Acid-free corrosion protection agent, e.g., ESSO RUST BAN 397, Mobil Oil Tecrex 39

▪ **Ensure for a safe position of the device**

⚠ Caution

Risk of injury from missing retaining bolts
If the device is put down without the retaining bolts, it can tip over or roll away. Severe injuries may occur.
• Before starting work, make sure that the retaining bolts are screwed in.

1 Retaining bolts with counter-nuts

Fig. 6.7: Check the retaining bolts

The retaining bolts are screwed into the device ex-factory. These ensure for a safe position.

1 Make sure that the retaining bolts are screwed in and that the counter-nuts are secured.

Recommendation: remove the retaining bolts only if it is absolutely necessary. This is the only way to ensure that the device does not tip over or roll away after being installed

- **Lifting the device onto the Euro pallet**

1 Lifting eyes
2 Lifting gear chains

Fig. 6.8: Attaching the lifting gear

Warning

Risk of injury during transport
The device may be damaged when lifting and putting down, tipping over or falling down. By disregarding the load bearing capacity of the lifting gear, the device may fall. There is a risk of severe injuries for persons in the vicinity.
- Lift the device only on the intended lifting eyes.
- Before lifting, make sure that the load is safely secured.
- Never stand under suspended loads.
- Observe the weight specifications for the ultrasonic gas meter at hand.

1 Attach a suitable lifting gear (**2**) to the lifting eyes (**1**) of the device.

2 Tension the chain of the lifting gear slightly.

3 Undo the bolted connections from the system so that the device can be lifted out.

1 Retaining bolts
2 Tension straps
3 Timber wedge

Fig. 6.9: Secure the device on the Euro pallet

4 Place the Euro pallet under the device.

Without the retaining bolts (1) the flange must be guided between the timber wedges (3).

Warning

Risk of injury during transport

The device may be damaged when lifting and putting down, tipping over or falling down. By disregarding the load bearing capacity of the lifting gear, the device may fall. There is a risk of severe injuries for persons in the vicinity.

- Lift the device only on the intended lifting eyes.
- Before lifting, make sure that the load is safely secured.
- Never stand under suspended loads.
- Observe the weight specifications for the ultrasonic gas meter at hand.

5 Carefully place the device on the Euro pallet with the lifting gear.

6 Secure the device using the tensioning straps (2).

The tensioning straps must have a tight fit and must secure the device.

- **Place the corrosion protection mat inside the device**

Notice

Damage to the device from corrosion
If the device is not protected against corrosion, the function of the device may be affected.

- Place the corrosion protection mat inside the device.

1 Position of the corrosion protection mat

Fig. 6.10: Corrosion protection mat in the device

1 Clean the device and protect all blank parts against corrosion with an acid-free corrosion protection agent, e.g., ESSO RUST BAN 397, Mobil Oil Tecrex 39.

⇨ Chapter 11.7, “Cleaning the device” on page 167

2 Place the corrosion protection mat (1) inside the device.

- Provide the connection box (ATEX / IECEx) with blind plugs

1 Wrench
2 Screwed cable gland
3 Blind plug

Fig. 6.11: Mount the blind plugs

1 Insert the blind plugs (3) into the connection.

2 Tighten the screw connection (2) with a suitable wrench (1).

The following sealing bolts supplied must be used in countries where CSA guidelines apply. If only transport is taking place, you can use 1/2" or 1" screws with appropriate length as an alternative.

- **Applying the protective sticker / blind plugs to the flanges**

  The flanges must be sealed with a protective sticker or blind plug made of plastic.

Sealing the flange with protective stickers

1 Protective sticker
2 Flange

Fig. 6.12: Applying the protective sticker

1 Clean the sealing area with grease remover.

The sealing surface must be free of grease and contamination.

2 Stick the protective sticker (A) onto the sealing surface of the flange (B).

Sealing the flange with blind plugs

1 Insert the blind plugs into the opening of the flange so that the blind plugs have a tight fit.

- **Applying the outer packaging to the device**

Notice

Damage caused to the device from incorrect storage / transport
If the device is not protected correctly by the packaging material, dirt or humidity may enter the device and damage it.
- Pack the device according to the instruction.
- Consider the special transport requirements on the packaging material, e.g., for transport overseas.
- Please contact RMG service in case of doubt.

Use the original packaging that was supplied along with the device. Please contact RMG service if you have any questions.

Options for the outer packaging can be, for example:

- sea-proof wooden crate
- cardboard packaging

1 Protect the device in the outer packaging against environmental influences.

6.3 Storage

In this chapter you will receive information on the correct storage of the device. You are also provided with information that must be observed when storing for long periods.

Danger

Mortal danger from damage in the warehouse
If the device is stored for longer than one year, the device may be damaged from incorrect outer packaging or securing of the device. In potentially explosive environment, a defective device may lead to an explosion. Danger of poisoning!
- Avoid long storage times.
- Have the device checked by RMG service if the storage time is longer than one year. For this purpose, send the device to RMG.

6.3.1 Packing the device for storage

Notice

Damage caused to the device from incorrect storage / transport
If the device is not protected correctly by the packaging material, dirt or humidity may enter the device and damage it.
- Pack the device according to the instruction.
- Consider the special transport requirements on the packaging material, e.g., for transport overseas.
- Please contact RMG service in case of doubt.

1 Packing the device.

⇨ “Packing the device for transportation” on page 73

2 Observe the approved ambient temperature for storage.

⇨ Chapter 13.1, “Performance data” on page 178

6.3.2 Checking the device after storage

Gefahr

Mortal danger from damage in the warehouse
If the device is stored for longer than one year, the device may be damaged from incorrect outer packaging or securing of the device. In potentially explosive environment, a defective device may lead to an explosion. Danger of poisoning!
- Avoid longer storage times.
- Have the device checked by RMG service if the storage time is longer than one year. For this purpose, send the device to RMG.

- **Checking the device for any signs of damage**

There is a high risk to life and limb if a damaged device is used.

The following damage can compromise safety and the function of the device:

- notches on the flange sealing surfaces
- corrosion in the device or on the sealing surfaces
- cracked glass of the viewing window
- clouded glass of the viewing window
- cracks, flaking on the housing or the covers
- flaking paint

1 Check that the device is intact by a visual inspection.

If you discover that there is, e.g., any damage or other damage to the device, the device may only be re-used after consulting RMG.

2 If damaged: please contact RMG services.

7 Construction and Planning

In this chapter you will receive information on how you can integrate the device into the system and what you have to observe during this process.

Content

7.1 Connection flanges 81

7.2 Seals 82

7.2.1 Flat seal 83

7.2.2 Grooved gaskets 84

7.2.3 Spiral seals 85

7.3 Screws 87

7.4 Installation possibilities 88

7.4.1 Dependency on the gas flow direction 88

7.4.2 Two devices series connected (Face to Face) 91

7.5 Flow computer 93

7.1 Connection flanges

The devices from RMG are equipped with connection flanges.

The joining dimensions of the flanges for the pipelines to be connected must correspond to the connection dimensions of the device flanges.

- ANSI pressure stages: The flange joining dimensions comply with the standard ASME B 16.5.
- DIN pressure stages: The flange joining dimensions comply with the standard DIN EN 1092.

Notice

The USM GT400 with a nominal width of DN 80 (3“) uses different connection flanges. Instead of the screw lead-throughs - as in the flanges of all other nominal sizes - there are blind holes with internal threads. Corresponding screws are included in the scope of delivery, but can also be reordered if necessary.

7.2 Seals

Danger

Escaping gas from incorrect seals
If incorrect flange seals are used for several ultrasonic gas meters, potentially explosive gas mixtures can escape due to leaks. Risk of intoxication and explosion! Moreover, the pressure of the flange increases with the improper tightening of the screw bolt.

- Make sure that the flat seal does *not* protrude over the sealing surface into the pipeline.

Notice

Malfunctions from incorrect seals
If flange seals are used for ultrasonic gas meters that protrude into the pipeline, the measuring accuracy may be influenced.

- Make sure that the flat seal does *not* protrude over the sealing surface into the pipeline.

The durability of the flange connections has been verified for seals with the following maximum material values according to the AD2000 regulations.

Flat seals:	k0 x KD = 20 x bD | k1 = 1.3 x bD (N/mm)
Grooved gaskets:	k0 x KD = 15 x bD | k1 = 1.1 x bD (N/mm)
Spiral seals:	k0 x KD = 50 x bD | k1 = 1.4 x bD (N/mm)
Octagonal ring joint seal:	KD = 480 N/mm^2

7.2.1 Flat seal

Flat seal according to DIN 2690 / EN 12560-1 Form IBC

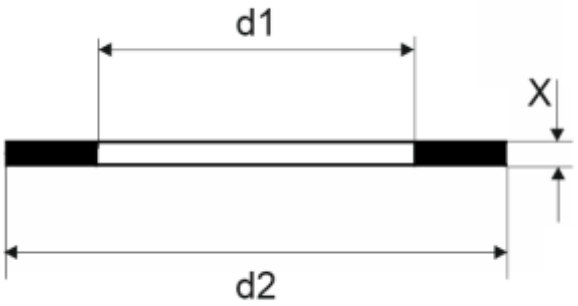

Dimensions of the seal:
d1 = Inside diameter
d2 = Outside diameter
X = Seal thickness 1.5 to 5 mm

Fig. 7.1: Flat seal

		PN10	PN16	ANSI150	PN25	PN40
DN in mm (inch)	d1 in mm (inch)	d2 in mm (inch)				
80 (3)	90 (3.54) 89 (3.5)/ANSI150	142 (5.59)	142 (5.59)	136.5 (5.37)	142 (5.59)	142 (5.59)
100 (4)	115 (4.53)	162 (6.38)	162 (6.38)	175 (6.89)	168 (6.61)	168 (6.61)
150 (6)	169 (6.65)	218 (8.58)	218 (8.58)	222 (8.74)	225 (8.86)	225 (8.86)
200 (8)	220 (8.66)	273 (10.75)	273 (10.75)	279 (10.98)	285 (11.22)	292 (11.52)
250 (10)	274 (10.79)	328 (12.91)	330 (12.99)	340 (13.39)	342 (13.46)	353 (13.90)
300 (12)	325 (12.80)	378 (14.88)	385 (15.16)	410 (16.14)	402 (15.83)	418 (16.46)
400 (16)	420 (16.54)	490 (19.29)	497 (19.57)	514 (20.24)	515 (20.28)	547 (21.54)
500 (20)	520 (20.47)	595 (23.43)	618 (24.33)	607 (23.90)	625 (24.61)	628 (24.72)
600 (24)	620 (24.41)	695 (27.36)	735 (28.94)	718 (28.27)	730 (28.74)	745 (29.33)

7.2.2 Grooved gaskets

Grooved gaskets according to EN 12560-6 with centering ring

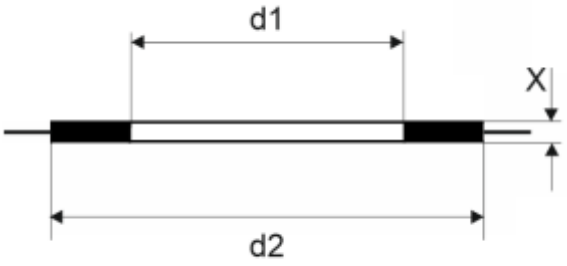

Dimensions of the seal:
d1 = Inside diameter
d2 = Outside diameter
X = Seal thickness 1.5 to 5 mm

Fig. 7.2: Grooved gaskets

	ANSI 300 / ANSI 600		**PN64**	
DN in mm (inch)	d1 in mm	d2 in mm	d1 in mm	d2 in mm
80 (3)	98.4	123.8	95	121
100 (4)	123.8	154.0	118	144
150 (6)	177.8	221.7	170	204
200 (8)	228.6	266.7	220	258
250 (10)	282.6	320.7	270	315
300 (12)	339.7	377.8	320	365
400 (16)	422.3	466.7	426	474
500 (20)	530.2	581.0	530	578
600 (24)	631.8	682.6	630	680

7.2.3 Spiral seals

Spiral seals according to EN 12560-2 with centering ring

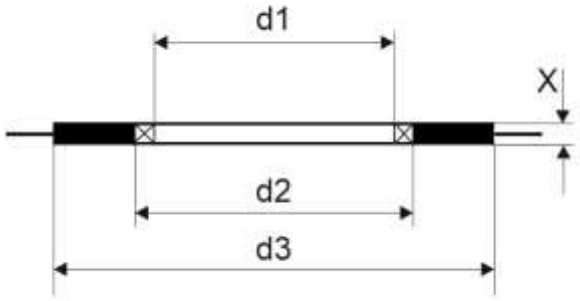

Dimensions of the seal:
d1 = Inside diameter of the centering ring
d2 = Inside diameter of the seal
d3 = Outside diameter
X = Seal thickness 1.5 to 5 mm

Fig. 7.3: Spiral seals

	ANSI 300			PN 64			ANSI 600		
DN in mm (inch)	d1 in mm (inch)	d2 in mm (inch)	d3 in mm (inch)	d1 in mm (inch)	d2 in mm (inch)	d3 in mm (inch)	d1 in mm (inch)	d2 in mm (inch)	d3 in mm (inch)
80 (3)	81 (3.19)	101.6 (3.98)	120.7 (4.75)	86 (3.39)	95 (3.74)	119 (4.69)	81 (3.19)	101.6 (3.98)	120.7 (4.75)
100 (4)	106.4 (4.19)	127.0 (5.00)	149.4 (5.88)	108 (4.25)	120 (4.72)	144 (5.67)	106.4 (4.19)	120.7 (4.75)	149.4 (5.88)
150 (6)	157.2 (6.19)	182.6 (7.19)	209.6 (8.25)	162 (6.38)	174 (6.85)	200 (7.87)	157.2 (6.19)	174.8 (6.88)	209.6 (8.25)
200 (8)	215.9 (8.5)	233.4 (9.19)	263.7 (10.38)	213 (8.39)	225 (8.86)	257 (10.12)	215.9 (8.5)	225.6 (8.88)	263.7 (10.38)
250 (10)	268.3 (10.6)	287.3 (11.31)	317.5 (12.50)	267 (10.5)	279 (10.98)	315 (12.40)	268.3 (10.6)	274.6 (10.81)	317.5 (12.50)
300 (12)	317.5 (12.5)	339.9 (13.38)	374.7 (14.75)	318 (12.5)	330 (12.99)	366 (14.41)	317.5 (12.5)	327.2 (12.88)	374.7 (14.75)

400 (16)	400 (15.7)	422.4 (16.63)	463.6 (18.25)	414 (16.3)	426 (16.77)	466 (18.35)	400 (15.7)	412.8 (16.25)	463.6 (18.25)
500 (20)	500 (19.7)	525.5 (20.69)	577.9 (22.75)	518 (20.4)	530 (20.87)	574 (22.60)	500 (19.7)	520.7 (20.50)	577.9 (22.75)
600 (24)	603.3 (23.8)	628.7 (24.75)	685.8 (27.00)	618 (24.3)	630 (24.80)	674 (26.54)	603.3 (23.8)	628.7 (24.75)	685.8 (27.00)

7.3 Screws

	Temperature range for bolts and nuts		
	-40°C to +80°C		
Pressure stages	**Version 1**	**Version 2**	**Version 3**
PN10, PN16, PN25, PN40, PN64	Boldt according to DIN EN ISO 4014 of material 25CrMo4, nuts according to DIN EN ISO 4032 of material 25CrMo4	–	–
ANSI150, ANSI300, ANSI600	Bolts according to ANSI B1.1 of material ASTM A 320 Grade L7, nuts according to ANSI B1.1 of material ASTM A 320 Grade L7	Bolts according to ANSI B1.1 of material 42CrMo4, nuts according to ANSI B1.1 of material 42CrMo4	Bolts with reduced shank according to DIN 2510 of material 25CrMo4, nuts according to DIN 2510 of material 25CrMo4

The stability of the flange connection was verified using the screws listed above in conjunction with the seals listed in Chapter 7.2. Other screw / flange versions have not been inspected.

Notice

Variant 3 bolts with reduced shank may only be used for devices within the area of PED (Pressure Equipment Directive) application.

Notice

DN 80
Screws are provided by RMG for the USM-GT400 for diameter DN80.

Depending on the flange type the following hexagonal bolts are used for DN80:

PN10/16	PN25/40	PN64	ANSI150	ANSI300	ANSI600
DIN EN 24014 (DIN931 ISO4014) M16 x 48 L=48 mm or material: 25CrMo4 galvanized	DIN EN 24014 (DIN931 ISO4014) M16 x 52 L=52 mm or material: 25CrMo4 galvanized	DIN EN 24014 (DIN931 ISO4014) M16 x 56 L=56 mm or material: 25CrMo4 galvanized	5/8“ - 11 UNC 2A x 2 1/8“ L=54mm (2 1/8“) UNC A320 Grad7 or material: 42CrMo4 galvanized	3/4“ - 10 UNC 2A x 2 1/4“ L=57,2mm (2 1/4“) UNC A320 Grad7 or material: 42CrMo4 galvanized	3/4“ - 10 UNC 2A x 2 5/8“ L=66,7mm (2 5/8“) UNC A320 Grad7 or material: 42CrMo4 galvanized

These screws can be used down to -40°C.

7.4 Installation possibilities

You have different possibilities when installing the device into your system. Please verify a proper inner diameter of any pipe that is connected to the meter.

⇨ See chapter 13.6 “Inner diameter of connecting spool pieces” on *page 189*

7.4.1 Dependency on the gas flow direction

In order for the installation to correspond to the requirements of the Measurement Instrument Directive 2004/22/EC (MID) or Measurement Canada (MC), the device must be installed with an inlet and outlet piping.

With this installation, the device can be used for calibrated measurements and for secondary measurements.

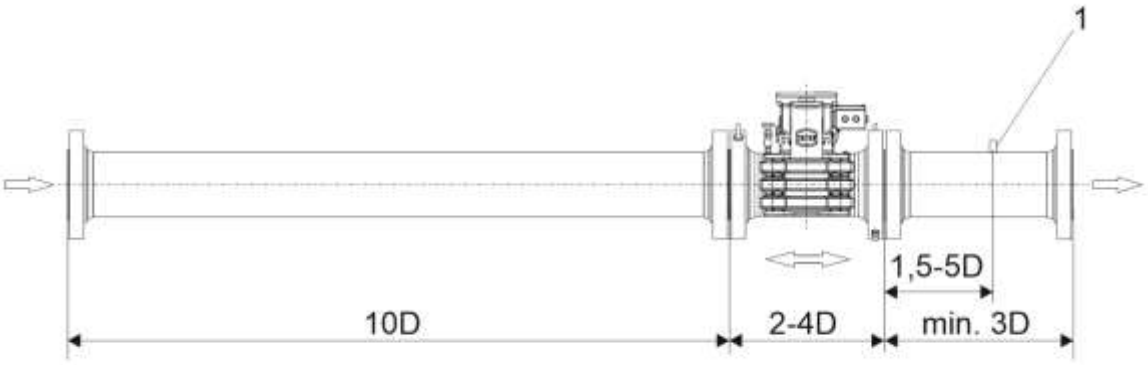

1 Temperature sensor

Fig. 7.4: Unidirectional operation

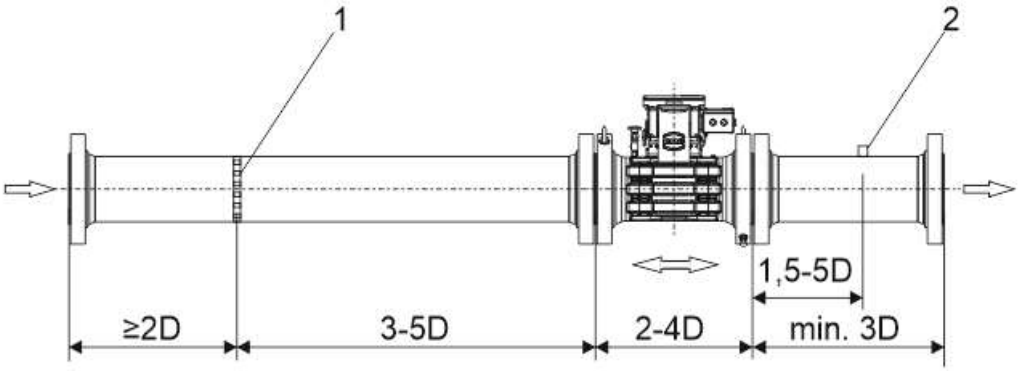

1 Flow conditioner
2 Temperature sensor

Fig. 7.5: Unidirectional operation compact installation

Bidirectional operation

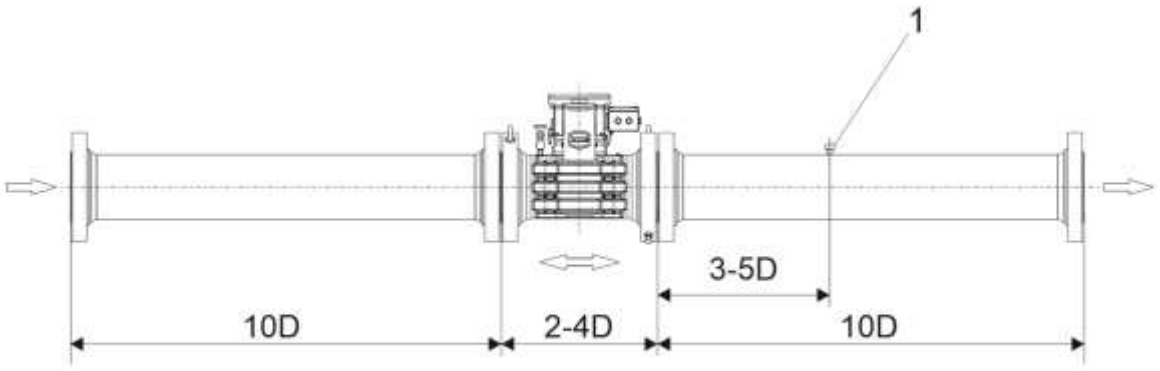

1 Temperature sensor

Fig. 7.6: Bidirectional operation

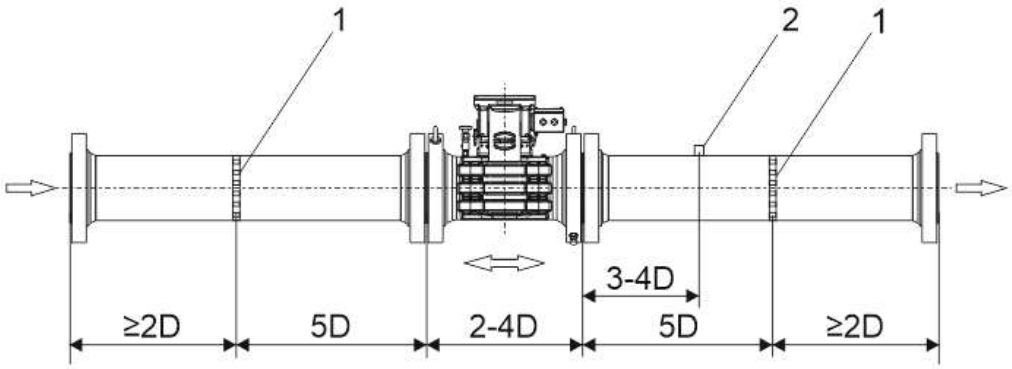

1 Flow conditioner
2 Temperature sensor

Fig. 7.7: Bidirectional operation compact installation < DN 300 (12")

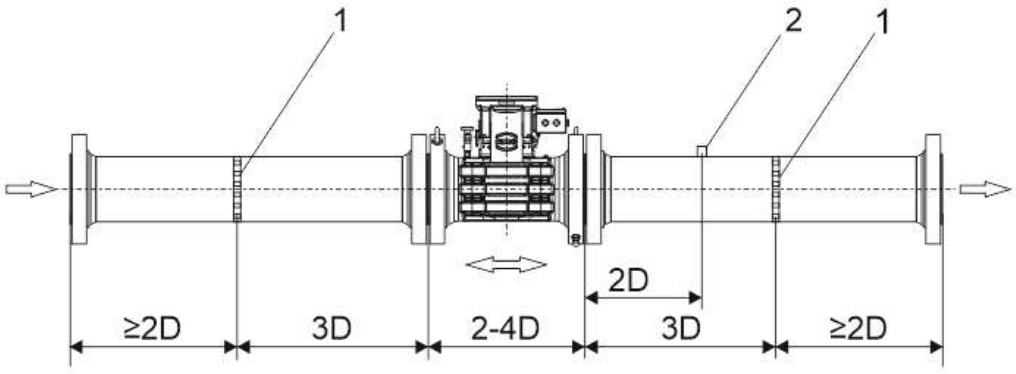

1 Flow conditioner
2 Temperature sensor

Fig. 7.8: Bidirectional operation compact installation ≥ DN 300 (12")

7.4.2 Two devices series connected (Face to Face)

You can install one or several devices in series.

Notice

Malfunctions from pairing the devices incorrectly
If the devices do not match one-another for these installation possibilities, incorrect measurements may occur.

- Please consult RMG if a Face-to-Face installation is possible with the desired devices and number of devices.

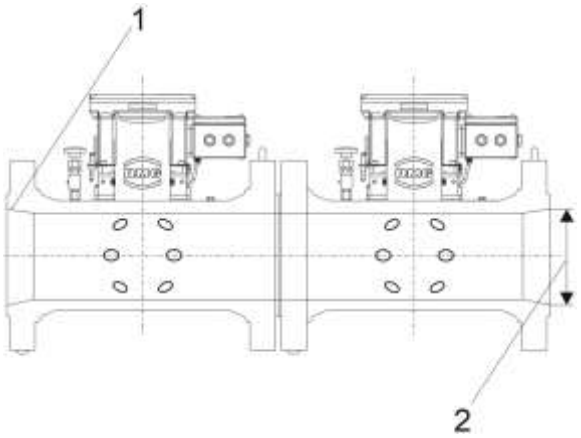

1 Tapered bore
2 Inner diameter

Fig. 7.9: Face-to-Face Installation

With this installation option, two or several devices are connected with one-another via the flanges. Third-party manufacturer devices can also be connected to RMG devices.

For this purpose, a tapered bore can be applied to the flanges on the inlet and outlet piping.

The flanges that are used to connect the devices with one-another do not require a tapering. For third-party manufacturer devices, you have to check if a tapering is required.

Notice

For the device with the smaller inner diameter it is mandatory to use a tapering.

If two RMG devices are connected with one-another, the inner diameter must be continuously the same.
Different sized devices cannot be connected to one-another.

7.5 Flow computer

If required, you can connect one or two flow computers to the device.
Follow the installation guidelines of the flow computer:

⇨ *Observe the installation instructions for the flow computer*

The 2 interfaces RS485-1 and RS485-2 have the same features and you may change in the following1 to 2 (and 2 to 1) freely.

However, the RS 485-1 (in contrary to the RS 485-2) does not permit a parameterizable byte sequence for the data types Long and Float. We therefore recommend that you use the RS 485-1 for the DZU protocol and the RS 485-2 for instance F communication. You may find more information in chapter 8.3.

Flow computer from RMG

The device is compatible with the following flow computer series from RMG:

- ERZ 2000NG
- ERZ 2400

If you want to use the flow computer from RMG specified above, you do not have to carry out any configurations. The flow computers from RMG can directly process the protocol of the ultrasonic gas meter from RMG directly. For this purpose, the flow computer has to be connected to the digital interface RS485-1 in order to allow all diagnosis functions to be used. If you want to install an additional flow computer for reasons of security, this must be connected via the interface RS485-2.

Flow computer from third party manufacturer

Flow computers from third-party manufacturers can be connected to the device. These can only be connected to the digital interface RS485-2. This interface communicates via a Modbus protocol. In order to be able to use all diagnosis functions, the Modbus must be configured. You can also use the high-frequency outputs pulse 1 and 2. When parameterizing, take care that the maximum possible gas flow rate correlates to a maximum frequency of 2 kHz. All diagnosis functions cannot be used via this interface. If you are using a third-party manufacturer device, you have to configure the flow computer.

Connecting a flow computer for example an ERZ 2000 / ERZ 2400

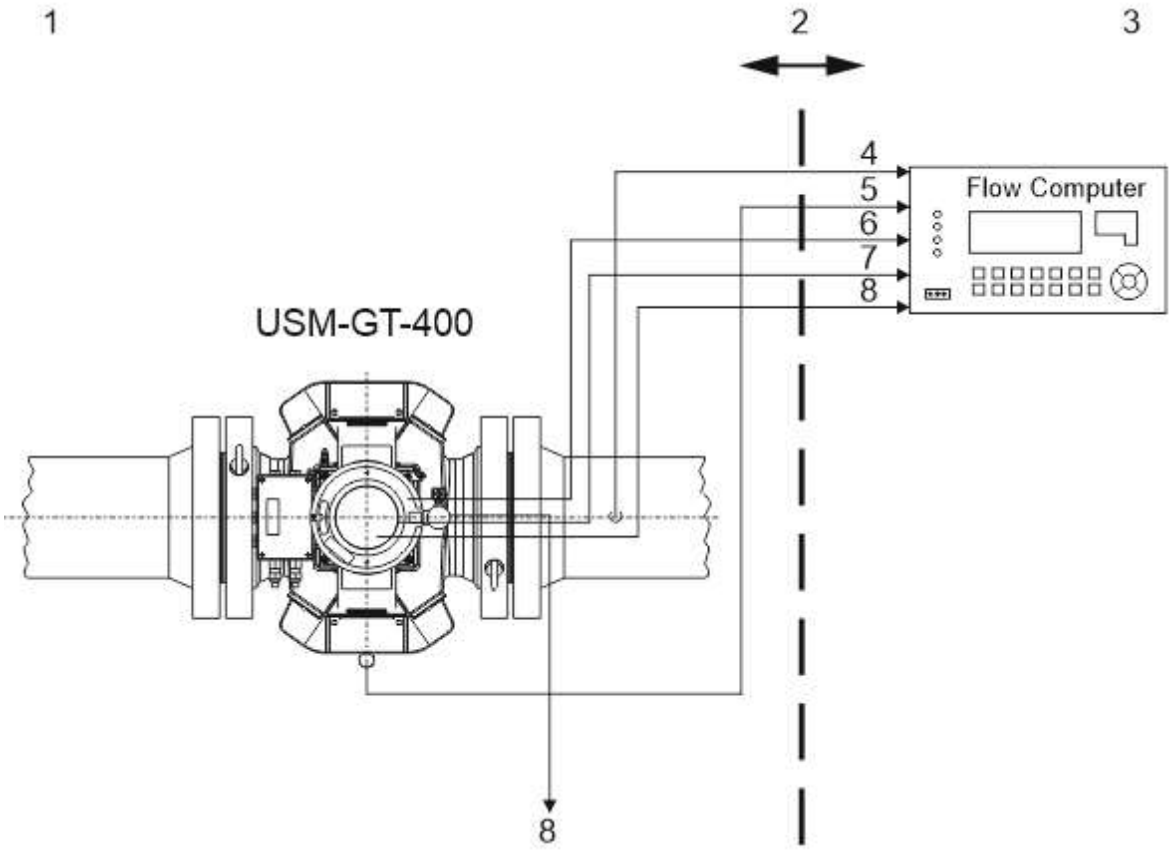

1 Explosive atmospheres Device group II zone I or Class 1, Division 1
2 Maximum distance 500m
3 Safe area
4 Temperature
5 Pressure
6 Pulse
7 Alarm
8 RS 486-2 (Modbus ASCII oder RTU)
9 Service-Interface RS 485-0 for RMG View

Fig. 7.10: Connection diagram for connection of a flow computer for example ERZ 2000 / ERZ 2400

The cable length must *not* exceed a length of 500 meters / 1640 feet.

More information on the installation of a flow computer can be found here:

⇨ *Operating instructions of the flow computer*

8 Installation

In this chapter you are provided with information on how you can correctly install the device and what you have to observe during the process.

The tasks of the chapter described must only be carried out by trained and certified personal.

Content

8.1 Assembly work preparations 96

8.2 Installation of the device 99

8.2.1 Mounting the inlet and outlet piping 99

8.2.2 Installation of the connection box 101

8.3 Connecting the device electrically 103

8.3.1 Connecting the power supply 108

8.3.2 Digital interfaces of USM-GT400 108

8.3.3 Connecting the computer for RMGViewUSM 110

8.3.4 Connecting the flow computer 110

8.3.5 Connection of external DSfG-Device-F via Modbus 113

8.3.6 Interface converter 124

8.3.7 Connecting the device to earth 126

8.4 Installing the pressure connection 128

8.5 Outdoor installation 130

8.1 Assembly work preparations

Danger

Mortal danger from electric current
In potentially explosive environments, dangerous voltages can still remain as ignition sources for up to one minute after being switched off.
- Disconnect the device from the power supply before starting the maintenance work.
- Secure the device against being switched back on.
- Cordon-off the work area of the device, e.g., using a barrier and signs.
- After switching off the device, wait at least one minute before starting work. Ensure that the device is voltage-free. Then connect to earth and short-circuit.

Mortal danger from components under pressure
Flange joining elements, pressure tapping screw connections and valves must not be removed if pressure is applied to the device. Components may be flung around. Gas escaping may cause intoxication and burns. Risk of explosion!
- Carry out work on the device only when it is in a voltage-free state, is vented and without pressure.

Mortal danger from incorrect work
Hazards can only be recognized and avoided by specially trained personnel.
If work is carried out by persons who have not been trained for these special activities in potentially explosive areas, they may cause an explosion.
- Have installations only carried out by especially trained personnel, (expert according to DIN VDE 0105, IEC 364 or similar national, standards).

Mortal danger from damaged sealing surfaces
If sealing surfaces are damaged, e.g., from notches or scratches, leaks may occur. Risk of intoxication and explosion!
- Install only an undamaged device

Warning

Risk of injury during transport
The device may be damaged when lifting and putting down, tipping over or falling down. By disregarding the load bearing capacity of the lifting gear, the device may fall. There is a risk of severe injuries for persons in the vicinity.
- Lift the device only on the intended lifting eyes.
- Before lifting, make sure that the load is safely secured.
- Never stand under suspended loads.
- Observe the weight specifications for the ultrasonic gas meter at hand.

Caution

Risk of injury from missing retaining bolts
If the device is put down without the retaining bolts, it can tip over or roll away. Serious injuries may occur.
- Before starting work, make sure that the retaining bolts are screwed in.

Notice

Damage to the device when used as a climbing aid
If the device is used as a climbing aid, components may be damaged.
- Do *not* use the device as a climbing aid.
- Use a suitable non-slip step that allows you to reach the components easily and safely.

▪ **Carry out preparatory work**

1 Unpack the device.
⇨ *Chapter 6.1.3, “Unpacking the device” on page 67*
2 Remove the transporting locks.
⇨ *Chapter 6.1.6, “Removing the transporting locks” on page 71*

For ATEX / IECEx

1 Wrench
2 Screwed cable gland
3 Blind plug

Fig. 8.1: Remove the blind plugs

3 Unscrew connection (2) with a suitable wrench (1).

4 Pull the blind plugs (3) out of the connection.

5 Screw glandes not required must be replaced by explosionproof screw connections.

Recommendation: store the blind plugs for the future or for returning to RMG for service work.

For NEC 500

In countries where CSA guidelines apply, the connections not required must be provided with gasket screws ex-factory. Please leave these in the screw connection and only connect the cable that leaves the conduit seal. When joining the conduits to the flame block, ensure for a slight gradient away from the flame block in order to avoid the accumulation of water on the conduit seal. Moreover, also ensure that you do not twist the conduit seal when securing the conduit as the cable in the electrics housing may tear-off as a result. If necessary, use a respective bolted connection (union).

For all devices

6 Secure the device with retaining bolts for the installation.

⇨ *Chapter 6.2, “Ensure for a safe position of the device” on page 73*

7 Check the device for any signs of damage.

⇨ *Chapter 6.3.2, “Checking the device after storage” on page 80*

8 Clean the sealing surface of the flange from contamination with a gentle cleaning agent.

8.2 Installation of the device

8.2.1 Mounting the inlet and outlet piping

Danger

Escaping gas from incorrect seals
If flange seals are used for ultrasonic gas meters that protrude into the pipeline, potentially explosive gas mixtures may escape due to leaks. Risk of intoxication and explosion!

- Make sure that the flat seal does *not* protrude over the sealing surface into the pipeline.

Observe the instructions for the dimensions!

⇨ *Chapter 13.5, “Weights and dimensions” on page 184*

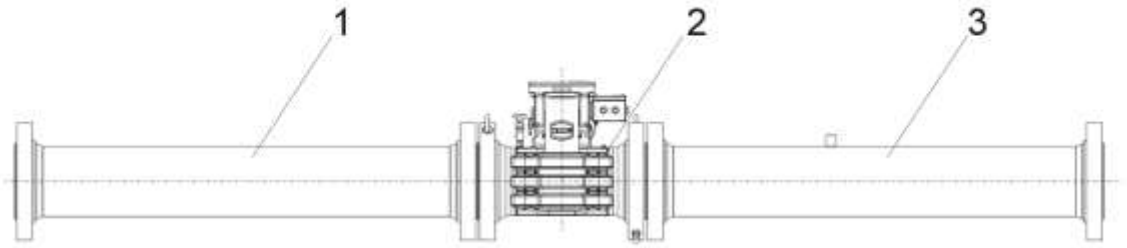

1 Inlet piping
2 Ultrasonic gas meter
3 Outlet piping

Fig. 8.2: Installation of the Inlet and outlet piping

The bolted connection of Inlet **(1)** and outlet piping **(3)** must be tightened according to the tightening torque of the plant manufacturer. The tightening torque must comply with the bolts and seals used.

1 Clean the sealing surface of the flange from contamination with a gentle cleaning agent.
2 Tighten the bolts crosswise in order to avoid tensioning.

Notice

In general, only the horizontal installation of the USM GT400 is strongly recommended. Turning the meter by more than 2 flange holes should not be used to avoid the collection of condensates in the sensor pockets. Only in dry and clean gas, other installation positions might be possible also, but it is not recommendable.

8.2.2 Installation of the connection box

The device can be ordered in different versions. Depending on the version ordered, another procedure must be carried out for the installation.

These are the order versions:

- connection box according to ATEX / IECEx

  ⇨ *“Installation of the connection box (ATEX / IECEx)” on page 101*

- connection according to NEC 50

  no box must be installed here, only connect the cable according to their designation.

  ⇨ *Cable connection “Connecting the device electrically” on page 103*

Installation of the connection box (ATEX/IECEx)

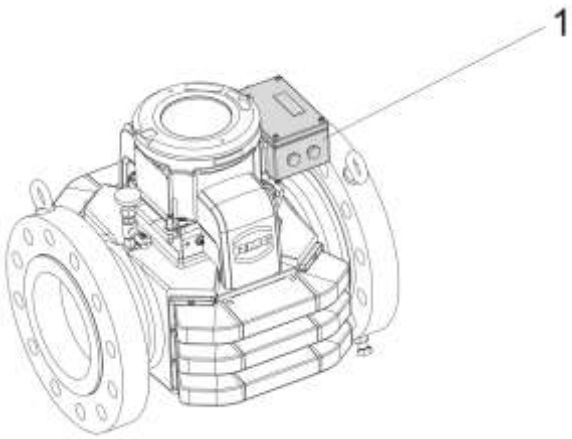

1 Connection box Ex-de

Fig. 8.3: Connecting the connection box

This version of the connection box is supplied in countries where the ATEX / IECEx standards apply.

The external connecting housing is pre-assembled and connected electrically to the ultrasonic electronics ex-factory.

Open the connection box (Ex-de)

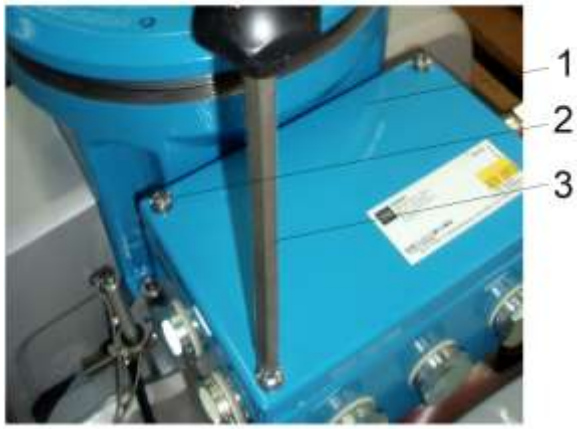

1 Cover
2 Screws
3 Screwdriver

Fig. 8.4: Opening the connection box cover

1 Unscrew the screws (2) using a suitable screwdriver (3).

2 Remove cover (1).

- **Closing the connection box (Ex-de)**

1 Place cover (1) onto the connection box.

2 Screw in the screws (2) using a suitable screwdriver (3).

Joining the device to the customers flameproof connection box

With this order version, no connection box is mounted on the device.

The device offers the connection by cable that are routed through the flame block. The wiring in the ultrasonic electronics is carried out ex-factory. The cables are marked accordingly for connecting and can be connected in a customer's connection box.

Observe the following when installing:

- The cables must be connected according to the lettering.
- Select a maximum cable length of three meters. If you need to use longer cables, please contact RMG services.

8.3 Connecting the device electrically

In this chapter you will receive information on connecting the electrical connections.

The terminal strip for the electrical connection is located in the external connection box. The terminal assignment and the markings of the cable are always identical.

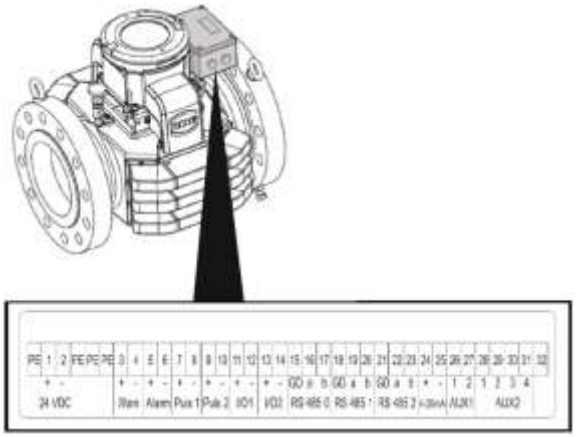

Fig. 8.5: Connection assignment on the terminal strip

Maximum assignment
The maximum assignment is always completely available for the connections of the Ex-de connection box.

- Current / voltage supply (24 VDC)
- Warning message (Warn)
- Alarm message (Alarm)
- Pulse output for "Forwards mode" (Pulse 1) and "Backwards mode" (Pulse 2)
- 2 x direction detectors for bi-directional operation (I/O1/2)
- Interface for RMGViewUSM (RS 485 0)
- Interface for an RMG flow computer (RS 485 1)
- Interface for any flow computer (RS 485 2)
- Analog output (4-20 mA)
- Connection for a pressure sensor as a 2-wire 4-20mA
  (AUX1; Terminal 26: [P +] Terminal 27: [P -])
- Connection for a temperature sensor (PT100; AUX2; Terminal28: [PT100 ++], Terminal 29: [PT100 +] Terminal 30: [PT100 -] Terminal 31: [PT100 -])

Cable specification
The following cable specifications are according to a complete assignment of the USM-GT-400 ATEX / IECEx version. The cable types listed are recommendations that can be replaced by technically comparable cable types.

Power supply 24 VDC	ÖLFLEX® CLASSIC 3 x 1.5 mm² oder 3 x 2.5 mm²	Cable Ø 12.3 mm 13.5 mm
Interface: RS 485-0, RS 485-1, RS 485-2 (can be laid in one cable)	LIYCY (TP) 3 x 2 x 0.75 mm²	9.4 mm
AUX1	LIYCY 2 x 0.75 mm²	6.0mm
AUX2	LIYCY 2 x 2 x 0.75 mm²	8.5 mm
Analog out 4-20 mA	LIYCY 2 x 0.75 mm²	6.0 mm
Warning + alarm	LIYCY 2 x 2 x 0.75 mm²	8.5 mm
Pulse 1 + pulse 2 + I/O 1 + I/O 2	LIYCY (TP) 4 x 2 x 0.75 mm²	10.7 mm

Twisted pair cable (TP) are only required in case of multiple circuits in one cable. Otherwise, LIYCY 2 x 0.75 mm² is sufficient for all signal outputs.

Connection box according to ATEX / IECEx

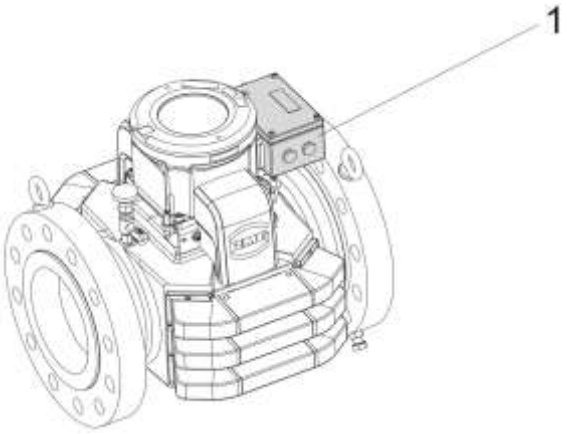

1 Ex-de connection box for Europe

Fig. 8.6: Close the connection box

In those countries where the standards ATEX and IECEx are valid, the device is supplied with the connection box Ex-de (1).

The external connection box is connected electrically to the ultrasonic electronics ex-factory and pre-assembled on the ultrasonic electronics. The external connection box does not have to be mounted.

Connection according to NEC 500
The number of lines that are permitted to be routed through the cable gland (½" and ¾") on the electrics housing and flame block is limited. Accordingly, this results in 4 different constellations that reflect the possibilities for connection.

The numbers given below at each figure only counts the limited number of cables; all cables are labeled due to the number of the basic upper terminal block

Version 1: Minimum assignment-½" sealing fitting

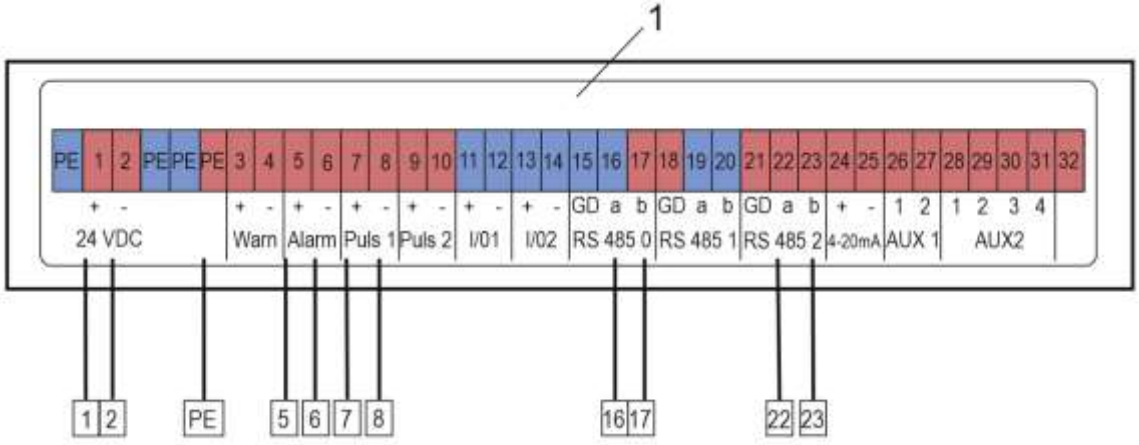

1 Terminal connections

Fig. 8.7: ½" cable gland with 11 wires, size AWG 18

1 1½" sealing fitting, connected with 11 wires, size AWG 18 (permitted, max. 11; Killark Type ENY-1TM).

For this version, the ERZ 2000 or ERZ 2000 NG cannot be connected via the DZU protocol (RS 485-1).

Version 2: Minimum assignment for bi-directional operation - ¾" sealing fitting

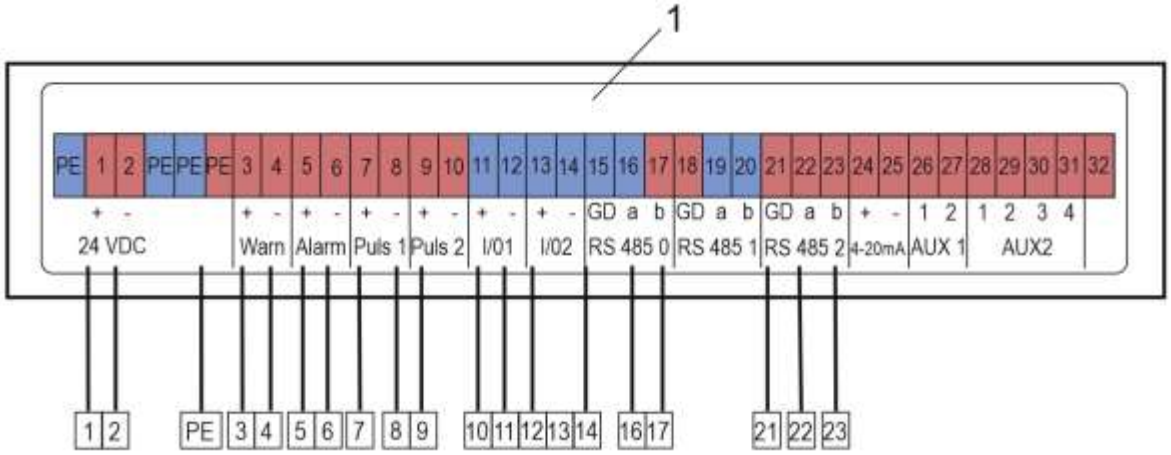

1 Terminal connections

Fig. 8.8: ¾" cable gland with 20 wires, size AWG 18

2 ¾" sealing fitting, connected with 20 wires, size AWG 18 (permitted, max. 20; Killark Type ENY-2TM).

For bi-directional operation.
For this version, the ERZ 2000 or ERZ 2000 NG cannot be connected via the DZU protocol (RS 485-1).

Version 3: Minimum assignment for operation with pressure and temperature measurement - ¾" sealing fitting

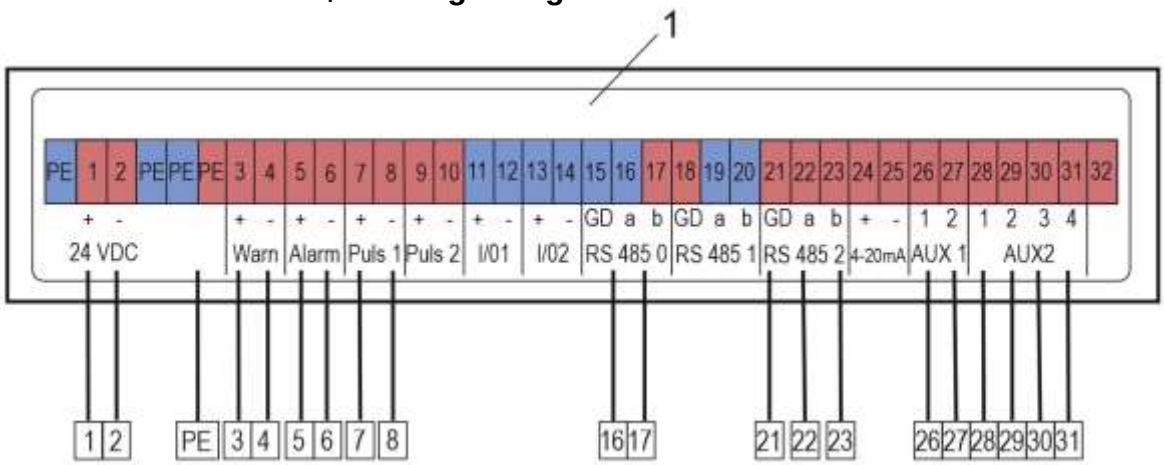

1 Terminal connections

Fig. 8.9: Measuring with pressure and temperature

For measuring with pressure and temperature:
For this version, the ERZ 2000 or ERZ 2000 NG cannot be connected via the DZU protocol (RS 485-1).

Version 4: Maximum assignment
½" and ¾" sealing fitting

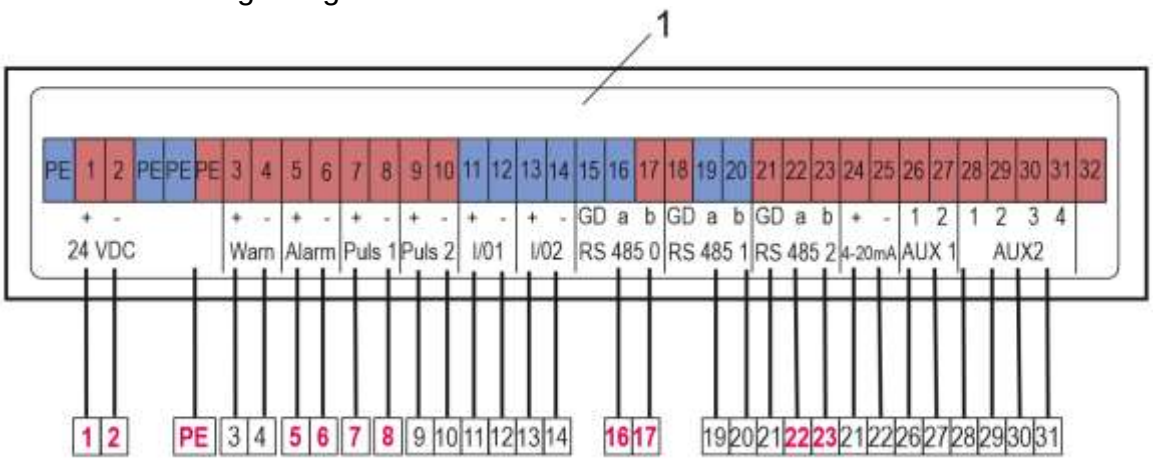

1 Terminal connections

Fig. 8.10: ½" and ¾" sealing fittings with up to 31 wires of size AWG 18

3 Connect ¾" sealing fitting with 20 wires of size AWG 18 (permitted, max. 20; Killark type ENY-2TM) and ½" cable gland with 11 wires of size AWG 18 (permitted, max. 11; Killark type ENY-1TM).

All connections are routed to the outside and can be connected and used.

Not used cables need to be isolated or connected to any unused free terminals.

8.3.1 Connecting the power supply

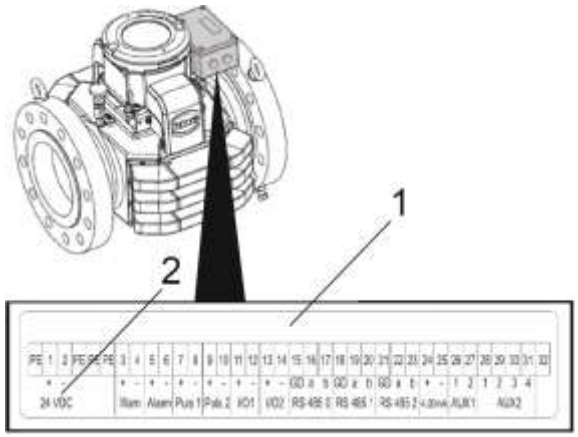

1 Terminal connections
2 Stromversorgung an den Klemmen 24 VDC

Fig. 8.11: Connection assignment on the terminal strip

1 Connect the power supply to the terminals 24 VDC (2).
Figure 8-16 on page 94.

8.3.2 Digital interfaces of USM-GT400

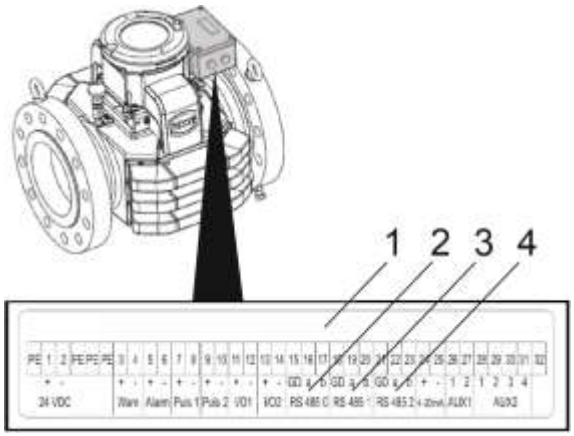

1 Terminal connections
2 Digital interface RS485-0
3 Digital interface RS 485-1
4 Digital interface RS 485-2

Fig. 8.12: Digital interfaces RS 485-0,1 und 2

The interfaces **RS 485-0, RS 485-1** and **RS 485-2** are basically equal and can be set for all possible connections. However, there are minor differences. These are taken into account in the recommended connections and make it easier to connect the recommended devices or the PC if they are followed.

Notice

Please use the connections as recommended below. If connections are used differently additional, extensive settings may become necessary.

Recommended connections at the digital outputs.

	RS 485-0	RS 485-1	RS 485-2
Proto-col, device	RMGView^{USM} (service)	IGM-protocol DZU-protocol ERZ2000, ERZ2400, ERZ2000-NG, ERZ2000-DI	Instanz-F 2nd ERZ , Flow computer other suppliers
fea-tures	no parameterizable byte sequence for data types Long and Float	no parameterizable byte sequence for data types Long and Float	Modbus-Master, can handle IGM- and DZU-protocol, too, parameterizable byte sequence for data types Long and Float

8.3.3 Connecting the computer for RMGView[USM]

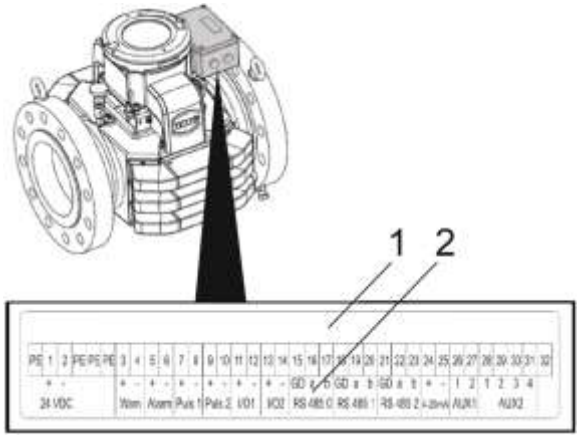

1 Terminal connections
2 Service connection

Fig. 8.13: Connection assignment on the terminal strip

1 Connect the computer to the terminals RS 485-0 (1).

In order to connect, you need an interface converter from USB to RS 485. (please see recommendations in chapter 8.3.4).

8.3.4 Connecting the flow computer

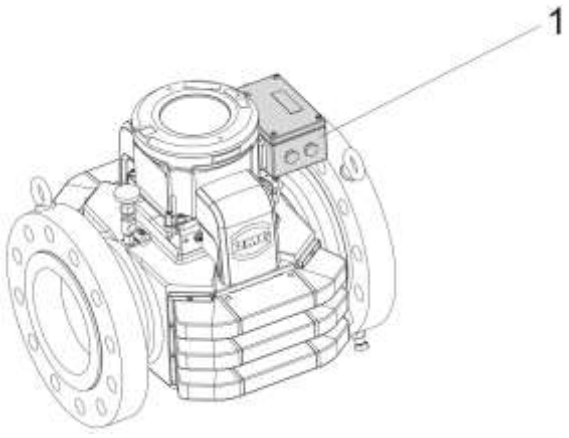

1 Ex-de according to ATEX and IECEx

Fig. 8.14: Connection box types

The flow computer is connected to the terminal strip of the external connection box (1).

1. Open the cover of the connection box.
⇨ “Open the connection box (Ex-de) ” on page 102

- **Connecting the flow computer from RMG**

Connection via data cable for ERZ 2000
Use the following cable:
- twisted pair and shielded cable
- maximum length 500 m / 1640 ft
- line cross-section min. 2 × 2 × 0.75 mm^2

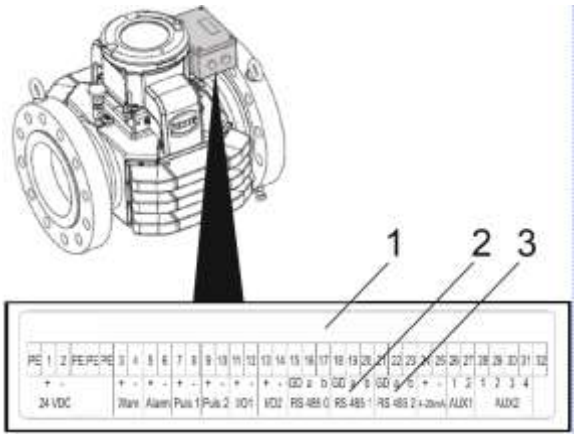

1 Terminal connections
2 Connection flow computer 1
3 Connection flow computer 2

Fig. 8.15: Connection assignment on the terminal strip

The 2 interfaces **RS 485-1** and **RS485-2** are equivalent and you may change in the following 1 to 2 (and 2 to 1) freely.
The difference is that the RS 485-1 interface does not have a parameterizable byte sequence for the long and float data types. This interface is particularly suitable for communication using the DZU protocol. The RS 485-2 is intended for communication via the manufacturer-independent Instance-F protocol, as this interface offers a parameterizable byte sequence.

1 Connect the first flow computer to the terminals **RS 485-1 (2)**.

2 Connect the second flow computer to the terminals **RS 485-1 (3)**.

Connecting a flow computer from third-party manufacturers

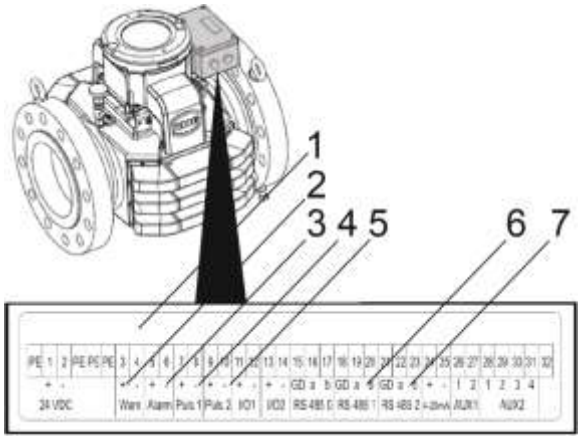

1 Terminal connections
2 Connection Warning messages
3 Connection Warning messages
4 Connection Pulse 1
5 Connection Pulse 2
6 Connection RS 485-1
7 Connection RS 485-2

Fig. 8.16: Connection assignment on the terminal strip

Flow computers from third-party manufacturers can be connected to **RS 485-1** or **RS 485-2** terminals. This interface communicates via a Modbus protocol.

All diagnosis functions can be made available via a configuration of the Modbus. Flow computers from third-party manufacturers can also be connected to the terminals **Pulse 1** and **Pulse 2**. When parameterizing, take care that the maximum possible gas flow rate is assigned to a maximum frequency of 2 kHz. All diagnosis functions are not available.

1 Connect the flow computer to terminals **RS 485-1 (6)** or **RS 485-2 (7)** or **Pulse 1 (4)** and **2 (5)**.

Warning and alarm messages are also available. You also have to connect a direction contact for bi-directional operation.

2 Connect the terminal **Warn (2)** for warning messages.

3 Connect the terminal **Alarm (3)** for alarm messages.

8.3.5 Connection of external DSfG-Device-F via Modbus

The intension to connect Ultrasonic gas meters comparable to an electronic evaluations unit via the same protocol arises due to the wish to transfer "all" data determined by an ultrasonic gas meter, i. e. measured values as well as status information or diagnostic data. Therefore, the connection via DSfG-device-F has become the standard in Germany.

Since the USM GT400 does not have its own DSfG bus access, its DSfG-instance-F protocol is implemented externally via a flow computer, the ERZ 2000-NG, which has this access. To realize the access the necessary data are transferred between the ERZ 2000-NG and USM GT400 via Modbus, which is often referred to as Instance-F, although it only provides the data required for DSfG Instance-F.

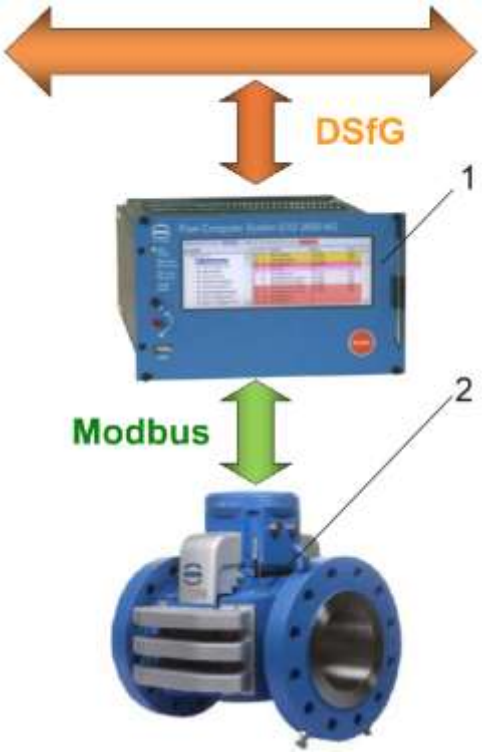

1 ERZ 2000NG with external DSfG device F
2 USM-GT-400 Ultrasonic flow rate meter for gas

Fig. 8.17: Data exchange between ERZ 2000 NG and USM-GT-400

The corresponding settings can be found in the VK Modbus Master USM menu in the ERZ2000-NG. The corresponding register expressions can be found in the VJ register expressions menu. In the USM GT400, the Modbus registers of instance F are listed in column BA.

Electrical connection

The following figure shows the rear panel of the ERZ2000-NG.
The USM GT400 is connected to the serial interface COM6.

Fig. 8.18: Connection of the USM‘s Modbus interface to COM 6

USM GT400 terminal compartment

Three serial interfaces for Modbus communication are available on the USM GT400. For instance F Modbus communication, the **RS 485-2** is provided with terminal 21 (**GND**), terminal 22 (**Data +**) and terminal 23 (**Data -**).

Fig. 8.19: Connection of the RS 485-2 (22 +, 23 -) at the USM GT400

Configuration for COM6 and COM7

For communication with ultrasonic gas meters via instance F the optional interface COM 6 for the ERZ2000-NG is necessary. The DIL switches are located on the option card required for this purpose. The jumpers for the RS 485 require a setting that is shown in the following Figure. After that, the option card is to be placed into the COM6 and 7 slots, which is the first one from the right looking from the display

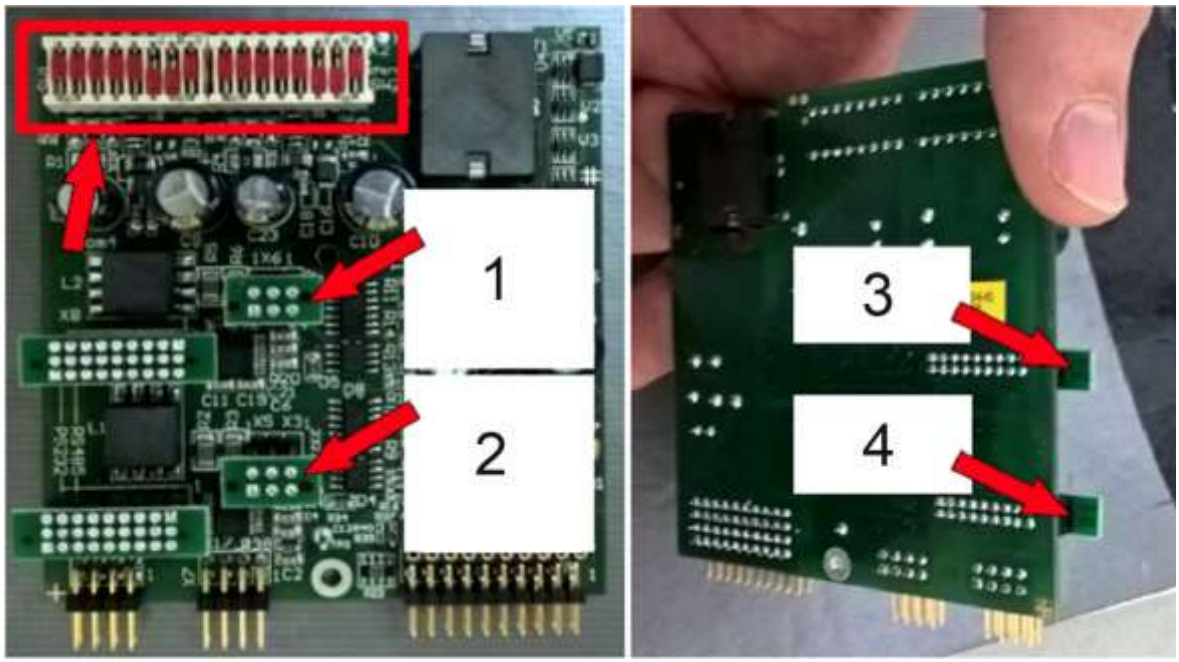

1 Square solder joint is to be aligned bottom left
2 Square solder joint is to be aligned bottom left
3 On top 485, below 232
4 On top 485, below 232

Fig. 8.20: Configuration of the option card to be used as COM 6 and 7 of the ERZ 2000-NG

Fig. 8.21: Slot for the option card with COM 6 and 7 of the ERZ 2000-NG

Operating mode of the ERZ 2000-NG

If the button "DSfG: F-instance COM6/7" in the menu GB Flow rate parameter is activated, the further necessary settings are suggested in this menu (light yellow-green background):

- **GB16 Volume transducer mode** -> „DZU“ mode
- **GB51 Device type -> „USM GT400**“
- **GB53 Meter type** -> „USZ“ (or “USM”)

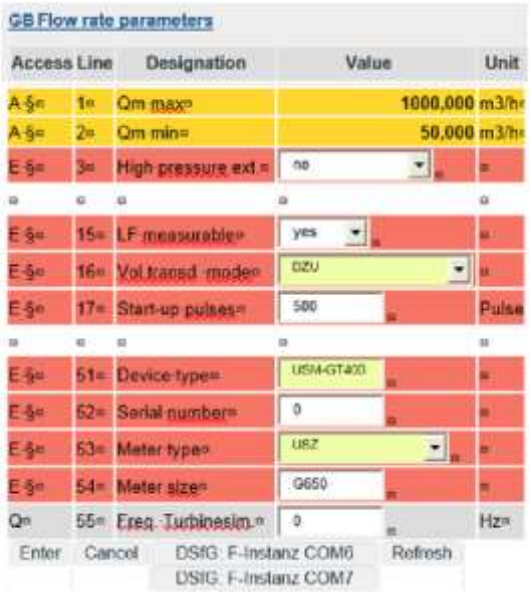

Fig. 8.22: Selection of DZU in Vol.transd. mode GB16

The proposal must then be "entered", i. e. accepted.

Protocol type in menu VJ Register Expressions

After the selection of "DZU" in Volume transducer mode the protocol type "DSfG: F-instance" must be defined in the menu **VJ register expressions** by button selection. The corresponding registers for the Modbus communication are thus suggested.

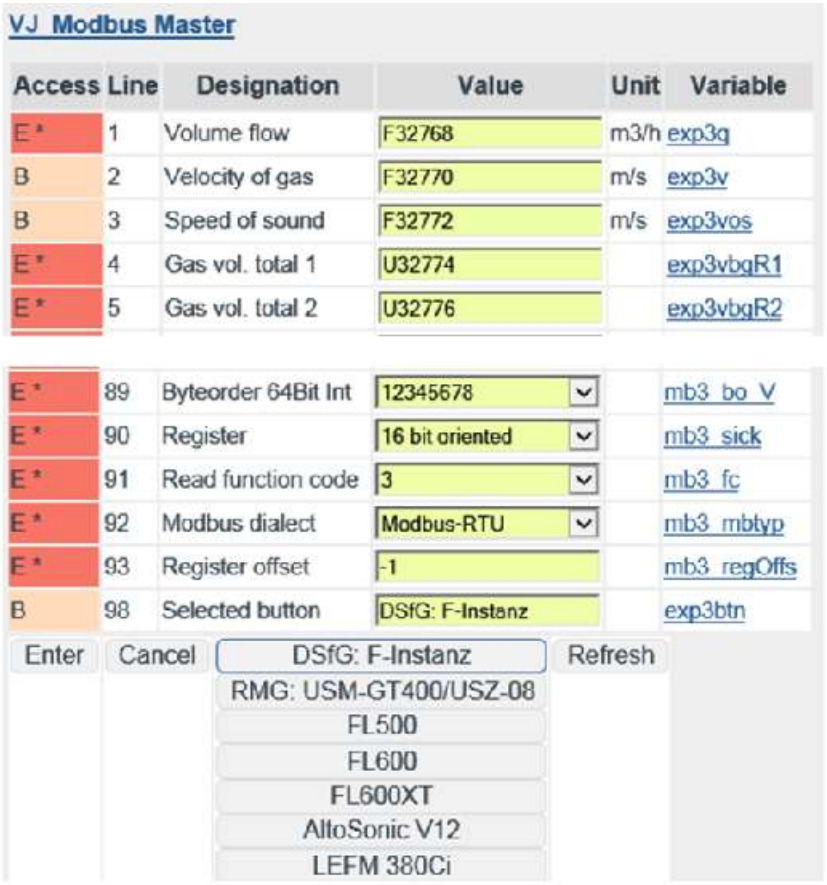

Fig. 8.23: Selection of DSfG: F-Instanz in VJ98

The proposal must then be "entered", i. e. adopted. In the complete menu you can see that many other parameters are transferred in addition to the flow rate.
The connection and selection of all other ultrasonic gas meters listed below are also possible due to legal metrology purposes.
Coordinate **VJ98 selected button** is used to enter which suggestion was entered.

Notice

Attention:
Even if in the same field with the same register, e. g. the information "swirl" is transmitted, the value is "swirl" is dependent form the device and path configuration used. It might be (significantly) different for the various devices. The same applies to all device-specific parameters.

Interface configuration COM6

For communication via Instance-F, the serial interface COM6 must be operated with parameters 38400 baud, 8 bits, parity None and 1 stop bit as well as the operating mode Universal Modbus master. These can be found in IB serial interfaces in coordinates IB31 to IB33.

IB Serial interfaces

Access	Line	Designation	Value	Unit	Variable
B	31	COM6 Baudrate	38400		baudC6
B	32	COM6 B/P/S	8N1		bpsC6
B	33	COM6 operating mode	Univ.Modbus Master		modeC6

Fig. 8.24: Interface configuration COM6

Notice

COM6 is then no longer available for communication with a gas chromatograph. Therefore, the Modbus Master communication for GC1 and GC2 in the coordinates IL50 and IL51 must be realized via the serial interface COM7.
It has to be deactivated if no Modbus IP is used.

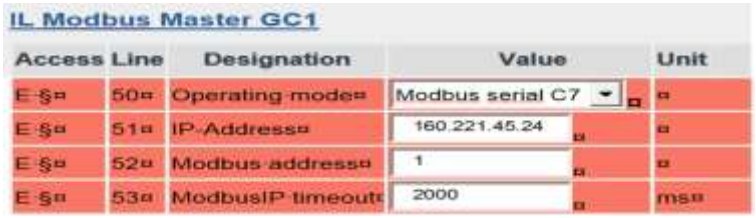

IL Modbus Master GC1

Access	Line	Designation	Value	Unit
E §¤	50¤	Operating mode¤	Modbus serial C7	¤
E §¤	51¤	IP-Address¤	160.221.45.24	¤
E §¤	52¤	Modbus address¤	1	¤
E §¤	53¤	ModbusIP timeout¤	2000	ms¤

Fig. 8.25: Operating mode: Modbus serial C7

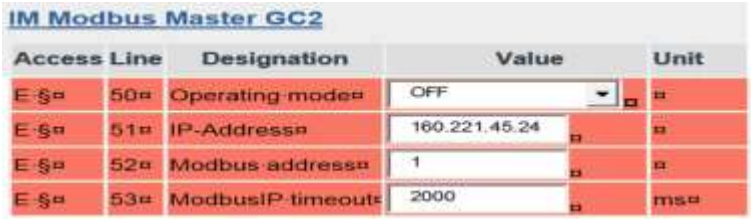

IM Modbus Master GC2

Access	Line	Designation	Value	Unit
E §¤	50¤	Operating mode¤	OFF	¤
E §¤	51¤	IP-Address¤	160.221.45.24	¤
E §¤	52¤	Modbus address¤	1	¤
E §¤	53¤	ModbusIP timeout¤	2000	ms¤

Fig. 8.26: Operating mode: OFF

Configuration VK Modbus according to instance F

For communication via DSfG Instance-F, **VK Modbus Master** USM must be parameterized according to the DSfG Instance-F specification as shown in the following figure.

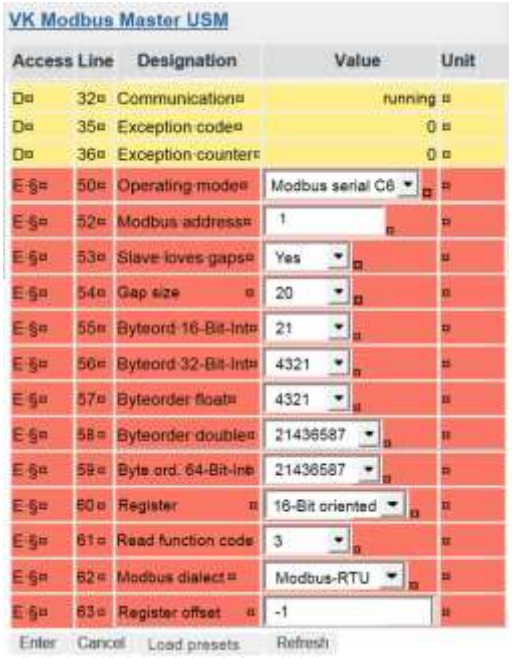

Fig. 8.27: Configuration of Modbus Master USM due to Instanz-F

The Modbus address in **VK52** must be assigned with the address of the USM GT400 are the same. They can be found in J-31. Selection values in **VK58** and **VK59** are irrelevant because these data types are not included in the instance protocol.

Configuration USM GT400 for Instance F

Serial interface RS 485-2 (opt. Ser2)

If the ERZ2000-NG is configured according to the DSfG Instance-F specification as described in the previous chapter, the USM GT400 must be connected to the RS 485-2 serial interface. This is defined in the coordinates J-25 to J-37 under the indication "Opt. Ser2 ". Here these are to parameterize, too. The Modbus address in J-31 can be freely selected and must be set identically in **VK52** in the ERZ2000-NG.

J-25	Opt. Ser2 Modus	Modbus		2112
J-26	Opt. Ser2 Baudrate	38400	baud	2113
J-27	Opt. Ser2 Bits	8		2114
J-28	Opt. Ser2 Parität	KEINE		2115
J-29	Modbus-2 Protokoll	RTU		2178
J-30	Modbus-2 HW-Mode	RS485		2179
J-31	Modbus-2 Adresse	1		2180
J-32	Modbus-2 Reg.Offset	1		2181
J-33	Modbus-2 Gap time	45		2182
J-34	Long Byte order	SWAPPED		2251
J-35	Float Byte order	SWAPPED		2252
J-36	Double Byte order	NORMAL		2253
J-37	DZU-2 Adresse	3		2285

Fig. 8.28: Parameterization of RS 485-2 for Modbus according to instance F

Serial interface RS 485-1 (Serial-1)

The serial interface RS 485-1 may be used as well but requires a different setting due to fixed deviating Byte order. It will not be treated here, in case it is required you may have a look into the German manual of the USM GT400.

Modbus Registers for Device-F

The Modbus registers for device-F can be found in chapter 18 the Appendix with the List of parameters. In the last part of this appendix, you may find the relevant Modbus registers 32768 to 33022 including the name, a short description a the type of the registers.

Additional Registers

The following Modbus registers contain additional USM-GT-400 data which are not included in the tables above. A connected ERZ 2000-NG needs this information so that its DSfG Device-F can be used.

9086 DSfG-Status

Register 9086 is linked to USM coordinate *BA-1*.

USM	Coordinate	Name	Value	Unit
USM_Ob	BA-1	DSfG-Status	0000	

Fig. 8.29: Additional register

This register contains 16 USM status bits.

- Bit-0 = 1: The unit “Volume” is set unequal „m3“.
- Bit-1 = 1: The unit “Flow” is set unequal „m3/h“.
- Bit-2 = 1: The unit “Speed” is set unequal „m/s“.

If one of these three bits equals 0 the requesting ERZ 2000-NG gets the message that the data of the registers 8000 to 80CE are invalid and may not be used for the external DSfG instance F. In this case the USM is mis-configured and the device-F will not work. Bits 3 to 15 are currently not in use.

9084 Qt

Register 9084 is linked to USM coordinate D-24.

USM	Coordinate	Name	Value	Unit
USM_Ob	D-24	Qt	5000,00	

Fig. 8.30: Additional register

This register contains a characteristic value of the USM which is dependent from Qbmax and Qbmin.

- Qt = 0,20 x Qbmax If 00 <= (Qbmax / Qbmin) < 30
- Qt = 0,15 x Qbmax If 30 <= (Qbmax / Qbmin) < 50
- Qt = 0,10 x Qbmax If 50 <= (Qbmax / Qbmin)
- Qt = 0,10 x Qbmax If Qbmin = 0

32792 signal acceptance

Register 32792 is linked with USM coordinate C-6 Performance.

Calculating the signal acceptance

The **signal acceptance** in BA-13 is equal to meter performance, which is given from coordinate C-6. This term is defined in chapter 4, Section 4.1 General description.

The value specifies how many values - of a maximum possible determinable quantity - could be taken into account. If one of ten measurements within a measurement cycle for a path is wrong (i.e. 9 valid measurements) the DSP provides 90% valid measurements, and the path performance is 90%.

The overall performance is the average of the performance of all individual paths (L-6 to Q-6, valid measurement G1 - G6) for the last n measurements (n = moving average in E-09; the default is 10 measurements).

Notice

The USM-GT-400 **keeps its calibrated accuracy** even if up to 2 measurement paths fails! The value “signal acceptance“ falls down to **66**% then.

Exceptions:

- If | Vw | <VwUg (the speed is below the minimum speed), then the path performance and the overall performance goes to 100%.

Additional documentation/literature Modbus

- *Modicon Modbus Protocol Reference Guide, PI-MBUS-300 Rev. J, June 1996*

DSfG

- *Gas Information Nr. 7 – 4. Überarbeitung 10 / 2009*
  Technische Spezifikation für DSfG-Realisierungen
  Teil 1 Grundlegende Spezifikation

- *Gas Information Nr. 7 – 4. Überarbeitung 10 / 2009*
  Technische Spezifikation für DSfG-Realisierungen
  Teil 2 Abbildung der DSfG auf die IEC 60870-5-101 und -104
- *DSfG-Datenelementeliste*
  DSfG Dellist 23-10-09 Teil3

ERZ 2000-NG

- *Bedienungsanleitung Flow Computer Serie ERZ 2000-NG*
- *Operating Instructions Flow Computer Series ERZ 2000-NG*

Instance-F: measured values and register addresses in ERZ2000-NG

In the ERZ2000-NG, with the calibration switch locked, the measured values and status information are displayed; if the calibration switch is open, the Modbus addresses can be seen (see below).
Detailed information including hourly averages and deviations of the individual values from the mean value can be found in the higher-level Instance-F menu V, whose subdirectories VA to VI are structured according to measured value categories.

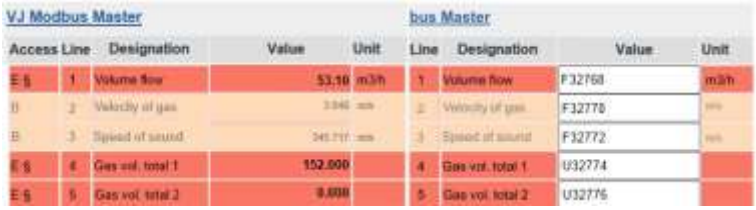

Fig. 8.31: Modbus register list in ERZ2000-NG with locked (left) and open (right) calibration switch

8.3.6 Interface converter

In this chapter you get some information about interface converters that have been tested and approved for operation with USM-GT-400.

Interface converter from Ethernet (PC) to RS 485 (USM GT400)

Here Phoenix module FL COMSERVER UNI 485-2313452 may be used. Link:

https://www.phoenixcontact.com/online/portal/de?uri=pxc-oc-itemdetail:pid=2313452&library=dede&pcck=P&tab=1

Fig. 8.32: Interface converter from USB to RS485 (USM-GT-400)

There are 3 recommendations:

1 I-7561 U-G CR unter: http://www.icpdas-europe.com

Fig. 8.33: Type ICP Con I-7561U-G CR

2 USB-RS485-WE-1800-BT (1,8 m cable length) and USB-RS485-WE-5000-BT (5,0 m cable length) at: http://rs-online.com

Fig. 8.34: Type USB-RS485-WE-1800-BT 687-7834 (1,8 m) or Type USB-RS485-WE-5000-BT 730-0164 (5,0 m)

3 USB-RS485-Converter / part number: 0202047 at: http://www.ipcas.com

Fig. 8.35: Type 0202047

You may find more details of the interface converters and their product information at the given links**.**

8.3.7 Connecting the device to earth

In this chapter you will receive information on connecting the device to earth and the protection of the device.

The PA connection must be at least 4.0 mm^2

Danger

Mortal danger from incorrect earthing
When the device is not correctly connected to earth so that electrostatic discharge can lead to spark formation, there is a risk of an explosion.

- Connect the device to earth as described in the instructions.

For ultrasonic gas meters DN150 (6") and DN100 (4")

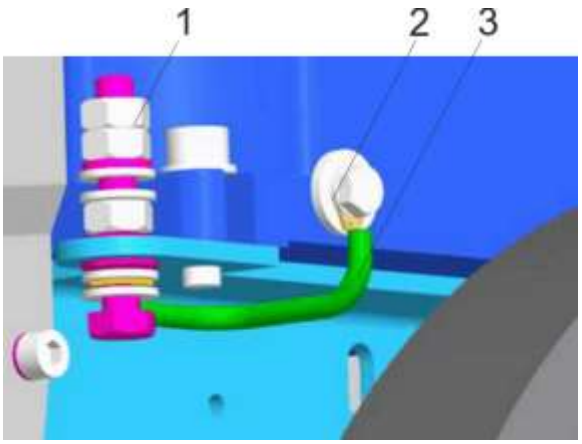

1 Earthing srew M6
2 Earthing srew M6
3 Earthing cable

Fig. 8.36: Connect to earth – Ultrasonic meters DN150 (6") and DN100 (4")

1 Fasten the customers earthing to the earthing screw (1).

For Ultrasonic meters DN200 (8")

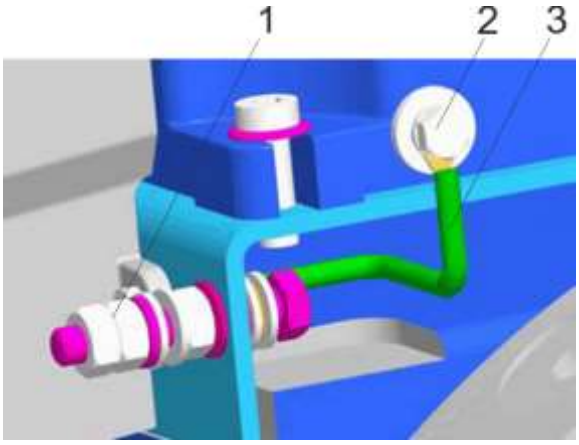

1 Earthing screw M6
2 Earthing screw M6
3 Earthing cable

Fig. 8.37: Connect to earth – Ultrasonic meters DN200 (8")

1 Fasten the customers earthing to the earthing screw (1).

Cable specifications

From a cable length of 1 m, you must use a screened cable for the data and network cable. The screen must be applied on both sides or only on one side (meter or control room).

Transducer

The transducers are metallic connected to the meter housing. You do not have to earth the transducer separately. You must ensure that the conductive connection with the pipeline of the measuring system is established.

8.4 Installing the pressure connection

Malfunctions from too small pressure connections
The cylindrical diameter of the pressure connection must be selected as ≥3 mm according to ISO 17089.

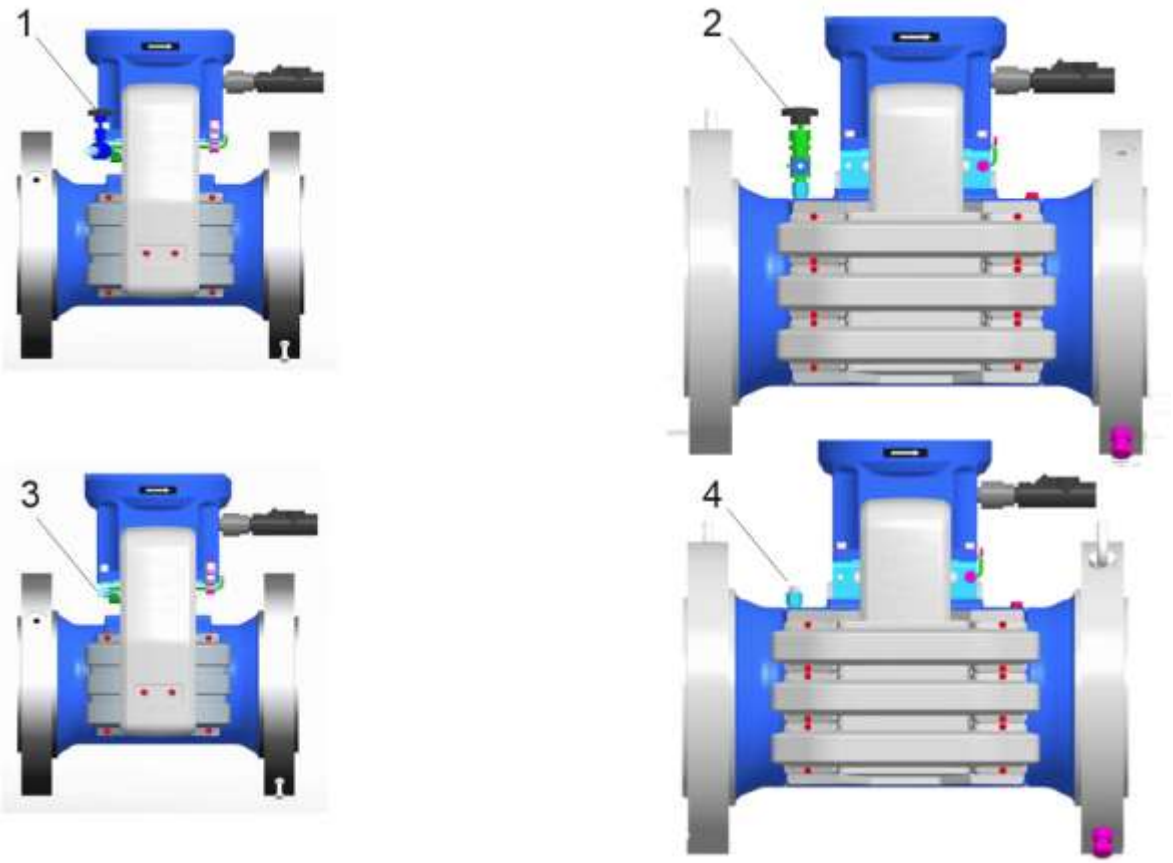

1 USM up to DN150 with shut-off valve
2 USM from DN200 with shut-off valve
3 USM up to DN150 without shut-off valve
4 USM from DN200 without shut-off valve

Fig. 8.38: Device with and without a shut-off valve

The pressure connection can be equipped with a shut-off valve (1 and 2) or without a shut-off valve (3 and 4). If the device is ordered without a shut-off valve, the connection is provided with a union nut (clamping screw connection) or a female thread.

- **Establish connection with the clamping screw connection**

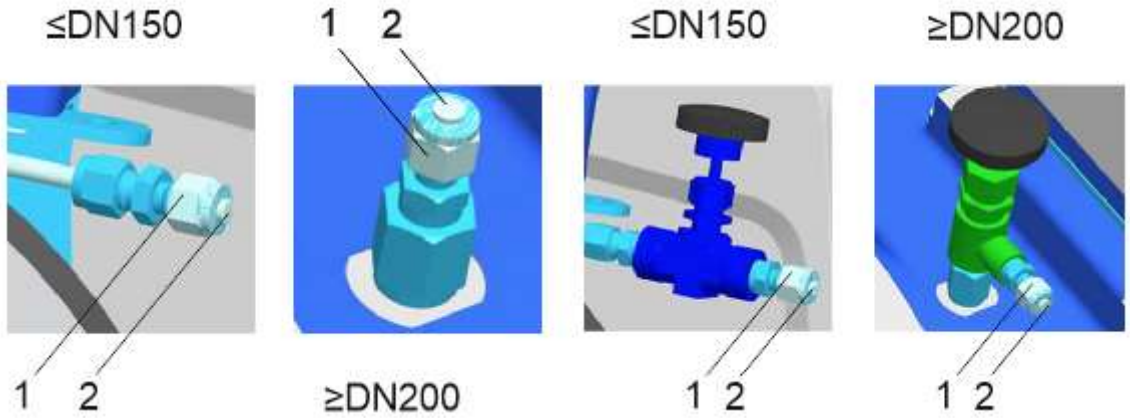

1 Union nut with clamping screw connection Ø 6 mm
2 Blind plug (plugged)

Fig. 8.39: Connection options of the pressure connection with clamping screw connection

1 Unscrew the union nut of the clamping screw connection (1).

2 Remove the blind plug (2).

3 Push the union nut and clamping rings onto the pipe.

4 Push the pipe into the clamping screw connection until the stop.

5 Tighten the union nut in order to fix and seal the pipe.

Usually, Swagelok screw connections (or similar) are used here.

6 Tighten the Swagelok screw connection hand tight.

7 Tighten the Swagelok screw connection using a spanner (wide across flats 14) by a further ¼ turn.

- **Establish connection at the female thread**

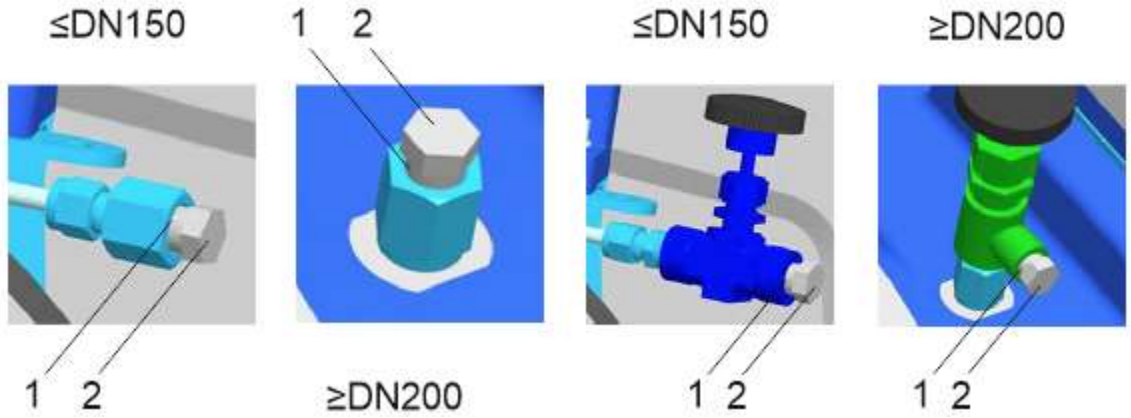

1 Female thread ¼"
2 Blind plug (screwed)

Fig. 8.40: Connection options of the pressure connection with female thread

1 Unscrew the blind plug (2).

2 Seal the connection in the female thread (1).

8.5 Outdoor installation

The USM-GT-400 may be installed outdoor, too. Doing this requires some important considerations and advices:

1. Please pay attention to the ambient temperature, it must not exceed the range from -40°C to 55°C.
2. Please prevent any contact of the USM-GT-400 with chemically aggressive gases and vapors. These gases and vapors may not damage the protective coating nor the materials used. The materials used can be found below in the section "Technical data".
3. The USM-GT-400 may not be completely buried or submerged in water.
4. The display must not be exposed to direct sunlight for a longer period of time (> 5 minutes). In this case please use the recommended sun protection (see next picture), that can be supplied from RMG service.

Fig. 8.41: Sun protection for the US electronic

5. If you expect higher temperatures than 55°C, then the USM-GT-400 has to be protected under a large sunshield (weather protection roof or similar).

9 Start Up

In this chapter you will receive information on start up after installation.

Content

9.1	**Comparing meter parameters**	**132**
9.2	**Checking functions of the USM**	**132**
9.3	**Reading out speed of sound**	**133**

9.1 Comparing meter parameters

After installing the meter and completing the electrical connections, the meter parameters must be compared with the values of the calibration certificate or test certificate. Example:

- Path lengths
- Axial distances
- Limit values

They are listed in an alphabetical order of their corresponding matrix coordinates and can be found using the operating display. As an alternative, they can be read out of the USE09 directly using the operating software RMGView^{USM}.

9.2 Checking functions of the USM

The functions can be checked as soon as the meter is exposed to pressure.

For this purpose, the content of the valid measurements (in %) are checked in the coordinates L-6 to Q-6. They should be 100% at zero flow and should also not fall below 70% under difficult flow conditions, for example, with high flow rates.

If the operating pressure is not reached, a functional check is only possible to a limited extent.

In this case, contact RMG services.

9.3 Reading out speed of sound

The slightly different speeds of sound are also readable (coordinate L-9 to Q-9).

The values of the individual paths should differ only by a little (< 0.5 m/s). An accurate comparison with the nominal speed of sound of the media is limited within the operating conditions.

Temperature stratification within a pipeline
If no flow is possible when start up, temperature stratification may occur within the pipeline so that speed of sound of paths with different measuring levels may deviate significantly from one another.
Convenient function checks with ERZ 2000 (-NG)
If an ERZ 2000 (-NG) is available, the content of valid measuring values (in %) and the measured speed of sound can also be checked in the column FH (ultrasonic diagnosis) for each path.

In case the speed of sound is not plausible, troubleshooting with RMGView^{USM} is possible. If one individual path has failed, then there is probably an error in the wiring or with the transducers of this path.

Further information can be found at:

⇨ Chapter 12, „Alarm and warning messages“ on page 176

10 Operation

This chapter provides you with information for working with parameters, lists and measurement values.

Content

10.1 Measuring values and parameters 135
10.1.1 Input protection for parameters 135
10.1.2 Parameter and measuring values with variable units 135
10.1.3 Calibration and Service Switch 136
10.1.4 Interfaces to converters and controllers 136
10.1.5 Interface for service and parameterization 137
10.1.6 Adaptation of the DZU protocol to ERZ 2400 138

10.2 Calling up and changing the parameters via the ultrasonic electronics 139
10.2.1 Calling up the value of a parameter 140
10.2.2 Entering data 141
10.2.3 Changing the parameters of protection E and S 144

10.3 Parameterize the USM interface 149
10.3.1 Interface 0 149
10.3.2 Interface 1 150
10.3.3 Interface 2 150

10.4 Modbus communication in detail 161
10.4.1 Codes supported 161
10.4.2 Data types 161

10.5 Configuration of the current output 163

10.6 List of the measurement values and parameters 163

10.1 Measuring values and parameters

The measuring values and parameters are arranged in a matrix structure where the columns are designated with letters and the lines with figures.

Operation of the entire system is carried out via the display of the USE09 with magnetic pin operation or via the service and parameterization software "RMGView^{USM}".

10.1.1 Input protection for parameters

The following table describes the column designation.

Terms	Input protection
A:	Display values that cannot be changed.
C:	User data that can be changed using the user password.
E:	Data subject to calibration that can only be changed with opened calibration switch.
F:	Free parameters without protection.
S:	Especially protected parameters that can only be changed via the user password and calibration switch.

10.1.2 Parameter and measuring values with variable units

The units are variable with several parameters and measuring values. The units of the variable parameters and measuring values can be changed via a central entry under a coordinate. This change has an effect on all parameters and measuring values for which the variable units have been defined.

The variable units are marked with an **&**.

Example:
Several parameters and measuring values have the entry **&v**: for a variable unit. The unit **m/s** is currently set for this variable. All parameters and measuring values with this variable unit should be converted to **ft/s**.

Under coordinate **AG-32** the value for the unit **m/s** is converted to **ft/s**. All parameters and measuring values with this variable unit **&v**: are converted to **ft/s**.

Possible variable units

Column	Coordinates	**Data type**
&v:	AG-32	m/s or ft/s (flow velocity)
&Q:	AG-33	m^3/h or acfh (flow)
&Z:	AG-34	m^3 or acf (meter)
&P:	AG-35	P/m^3 or P/cf (puls factor)

10.1.3 Calibration and Service Switch

There are several values / parameters which are protected against any change as long as the calibration switch is locked. The protection applies to the input from the keypad as well as to inputs via the Modbus - interface. The service switch extends the possibility of settings of the coordinate matrix for the service. The service switch prevents or allows to initialize the device parameters in case of failure with default values (CRC - error of Ferro - RAM see below).

Notice

- **Calibration and service switch must always be closed in custody transfer operation!**

10.1.4 Interfaces to converters and controllers

USM-GT-400 can be connected directly to a USZ 9000 or at an ERZ 2000 USC, the communication protocol used is IGM compatible. USZ 9000 or ERZ 2000 USC cannot transmit any data to USM-GT-400 via this interface.

The USM-GT-400 - IGM - interface is non-reactive!

For direct connection to a volume corrector either digital signals or serial protocols may be used.

Digital signals are:

- Two frequency outputs for the actual flow
- Two outputs for two flow directions
- Alarm and warning contacts

Serial protocols are:

- DZU
- DZU-DIAG
- DZU-X
- IGM und USE09
- VO
- DZU-SLAVE

10.1.5 Interface for service and parameterization

For parameterization of the USM-GT-400 different protections are available:

- sealable calibration switch
- individual user codeword
- sealable calibration switch and input of the individual user codeword
- freely programmable

For parameterization of the USM-GT-400 the interfaces "RS485-0", "RS485-1", "RS485-2" or keypad input and display are used. Protocol is Modbus - RTU or Modbus - ASCII. These protocols follow the protections noted above, means, if the calibration switch is closed, the corresponding parameters can not be changed. Also when using keyboard and display parameter can only be changed after the protections are unblocked. Display and keyboard do not effect the device further, i.e. it does not matter whether the display is available or not. Therefore it can be plugged or removed during operation. The Parameter setting can be changed to other protocols; but the parameters themselves can‘t be changed using them. Interface "RS485-0" can be used to update (to flash) the firmware. To flash a new firmware the software „HEXLoad“ is necessary at the PC. To initiate the update - function the calibration switch needs to be activated and the power needs to switched off / and on, too. An eventually newly flashed firmware can be clearly

identified via its firmware version and its checksum (CRC-16). Therefore, for matching checksum and version number is deposited at the PTB (registration authority). The checksum itself can be verified via the display or via Modbus.

10.1.6 Adaptation of the DZU protocol to ERZ 2400

DZU protocol (DZU slave) becomes bus-capable adjusting the coordinates of the bus address:

1. **J-01** mode serial 0 (extended menu: DZU-Slave)
2. **J-12** DZU-0 address
3. **J-14** mode serial 1 (extended menu: DZU slave)
4. **J-23** DZU-1 Address
5. **J-25** opt. ser2 mode (extended menu: DZU-Slave)
6. **J-37** DZU-2 address

Notice
This mode can be used only in areas where the MID is applied!

10.2 Calling up and changing the parameters via the ultrasonic electronics

This chapter provides you with information for operating the ultrasonic electronics via the display with a control panel.

The parameters can be called up and changed via the display with control panel or RMGView[USM].
⇨ *Software instructions RMGView[USM] (separate document)*

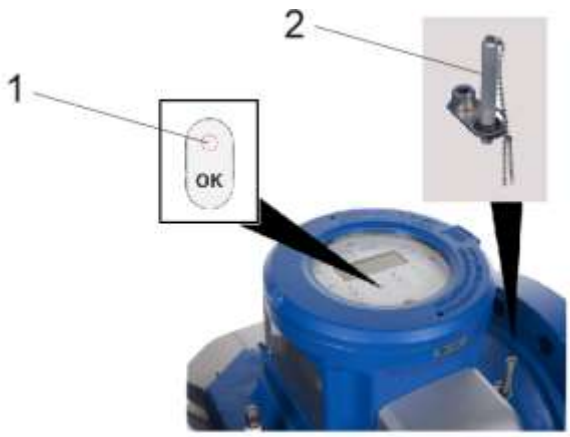

1 Switch point
2 Magnet

Fig. 10.1: Magnet for operating the buttons

When the cover of the ultrasonic electronics is closed, the buttons can be operated using the magnets supplied. In order to operate the buttons with the magnets (2), the magnet must be placed on the glass in the position with the switching point (1) of the button.

10.2.1 Calling up the value of a parameter

- **Select the column in the coordinate system**

Select the column of the coordinate on the control panel of the ultrasonic electronics using the button.

The button has been allocated with the following functions for navigating:

- **Press the button briefly**: one column to the right, e.g., from A to B.
- **Press the button longer**: depending on the duration of pressing the button:
  - one column to the left, e.g., from B to A.
  - continuously column by column to the left, e.g., from U to F.

1 Press the button to select the desired column.

- **Select the line in the coordinate system**

Select the line of the coordinate on the control panel of the ultrasonic electronics using the button.

The buttons have been allocated with the following functions for navigating:

- **Press the button briefly**: one column down, e.g., from E-01 to E-02.
- **Press the button longer**: continuously line by line downwards.

- **Press the button briefly**: one column up, e.g., from E-02 to E-01.
- **Press the button longer**: continuously line by line upwards.

1 Press the buttons to select the desired line.

The coordinates (column and line) of the parameter are selected. The value of the parameter is shown on the display.

10.2.2 Entering data

Observe the designations of the columns and the rights assigned.

⇨ “Input protection for parameters” on page 135

A parameter that is entered in the protection **E** or **S** can only be changed when the calibration switch is open. For a value / parameter / measurement value **S**, the code word also has to be entered for the ultrasonic electronics.

If this parameter is changed then the device is no longer considered as calibrated.

- Only carry out these tasks if you are authorized.
  ⇨ “Changing the parameters of protection E and S” on page 144

Depending on the type of data, you are offered different selection options when making entries.

In order to change data, the coordinate of the parameter must be selected.

⇨ “Calling up the value of a parameter” on page 140

- **Example for data type Float (F)**

Data type	Example
Float (F)	A-06 p-Max value

1. Press the button until the next value is marked in the display.

2. Press the button to select a value from the list.
   Possible value of the list.: 0 /…/ 9 / - / + / . / E / _

3. Press the button to confirm the value.

   The value is stored.

- **Example for data type Integer (I) and Long integer (L)**

Data type	Example
Integer (I)	D-10 Qb-min time
Long integer (L)	AF-02 electronic no.

1. Press the button until the next value is marked in the display.

2. Press the button to select a value from the list.
   Possible value of the list: 0 /…/ 9 / - / _.

3. Press the button to confirm the value.
   The value is stored.

- **Example for data type Text (T)**

Data type	Example
Text (T)	AU-01 User Test-1

1. Press the button until the next value is marked in the display.

2. Press the button to select a value from the list.
   Possible value of the list: 0 /…/ 9 / - / + / . / _ / A /…/ Z

3. Press the button to confirm the value.
   The value is stored.

Notice
The data type text is not a text in the actual sense, but a bit combination.

- **Example for data type Menu (M)**

Data type	Example
Menu (M)	A-17 p-mode

1. Press the button until the next value is marked in the display.

2. Press the button to select a value from the list.

3. Press the button to confirm the value.
   The value is stored.

- **Example for data type Time (U)**

Data type	Example
Time (U)	D-23 Qb-S time 2

1. Press the button until the next value is marked in the display

2. Press the button to select a value from the list.

3. Press the button to confirm the value.
   The value is stored.

10.2.3 Changing the parameters of protection E and S

This chapter provides you with information for changing parameters that are protected by the calibration switch and also by the code word of the ultrasonic electronics. This affects all parameters that are stored in the coordinates for columns E and S. For a parameter in column **S**, the code word also has to be entered for the ultrasonic electronics.

Danger

Danger to life from opening the device
If the cover or the housing of the device is opened in an area with a potentially explosive environment, then the device is no longer suitable to be used in the area with a potentially explosive environment. Risk of explosion!
- Open the device only when the device is voltage free.

Mortal danger from damaged components
If threaded holes, bolts or the sealing surfaces of the housing are damaged, the spark protection gap can no longer be guaranteed. Sparks resulting may lead to an explosion.
- Proceed with care when working with the bolt connections.
- Replace damaged components with new ones.
- Make sure that no parts of the housing are damaged**.**

Please note that for this task the official seal must be broken. The device must not be used for calibrated operation if the official seal is broken.

If the task is carried out by RMG service, the device does not have to be calibrated by a testing institute. The device is provided with a new official seal by RMG service.

- Führen Sie diese Arbeiten nur aus, wenn Sie dazu befugt sind.

- **Opening the cover of the ultrasonic electronics**

1 Switch off the system power supply.

1 Threaded pin
2 Boreholes for inserting the special tools
3 Special tool (2 pieces)

Fig. 10.2: Opening the cover

2 Unscrew threaded pin (1) out of the housing.
3 Insert the special tools into the boreholes.
4 Release the cover with the special key.

1 Cover

Fig. 10.3: Opening the cover

5 Screw the cover off with both hands.

- **Setting the ultrasonic electronics for configuration**

1 Calibration switch

Fig. 10.4: Opening the calibration switch

1 Press calibration switch (1) upwards to open it.

- **Screw down the cover of the ultrasonic electronics**

1 Cover
2 Position O-ring

Fig. 10.5: Screw down the cover

1 Each time you open the ultrasonic electronic you have to expect that the O-ring is damaged. Therefore, this damaged O-ring has to be replaced with a new one in general. (RMG provides a replacement kit with O-ring, grease, ... sales number: 38.03.001.00)
2 Screw the cover on with both hands.
3 Insert the special tools into the boreholes.
4 Tighten the cover with the special tools.
5 Screw in threaded pin hand tight.
6 Switch on the system.

- **Entering the code word of the ultrasonic electronics**

If you do not have the password for the ultrasonic electronics, request the code word from RMG Service.

1 Enter the code word for the ultrasonic electronics under coordinate AG-4.

- **Changing the value of the protected parameters**

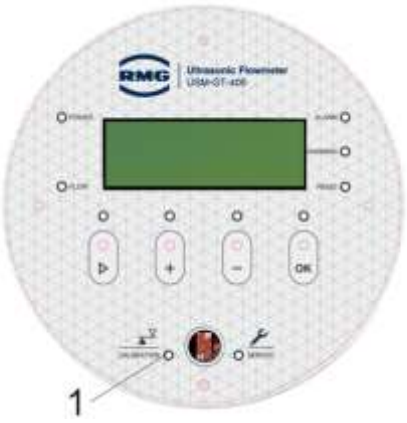

1 Calibration LED

Fig. 10.6: Check LED

AG-4 user code:
Standard setting: 9999 9999

- This value can be changed when the calibration switch is opened.

Note:

- During start up, this value can be set to customer requirements under the supervision of a calibration inspector.

1 Check LED.
The **Calibration** lights up. The calibration switch has been opened correctly.

2 Change the parameter values.

⇨ “Changing the parameters of protection E and S” on page 144

An open lock must be shown in the third line of the display to allow the value of the protected parameters to be changed.

If the lock is not shown as open, check the switch position of the calibration switch.

3 Activate the button with the magnet.
The value of the parameter can be changed.
⇨ *Figure 10-1 on page 139*

4 Activate the button with the magnet in order to position the cursor on the value of the parameters to be changed.

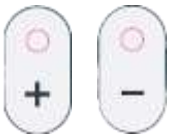

5 Activate the button with the magnet in order to set the desired value.

6 Activate the button with the magnet in order to confirm the desired value.

When the parameter is changed, you have to move the calibration switch back to the **closed** position.

- **Conclude work**

1 Switch off the system power supply.

2 Open the cover of the ultrasonic electronics.
⇨ *"Opening the cover of the ultrasonic electronics" on page 145*

3 Press calibration switch (A) downwards to close it.

4 Close the cover of the ultrasonic electronics.
⇨ *"Screw down the cover of the ultrasonic electronics" on page 146*

1 Calibration switch

Fig. 10.7: Close the calibration switch

10.3 Parameterize the USM interface

The ultrasonic gas meter has three serial interfaces that can be used for Modbus communication. The parameterization is carried out in column "J Serial Ports" of the coordinate matrix.

10.3.1 Interface 0

- Is reserved for service purposes or RMGView^{USM}.
- The parameterization is carried out using the coordinates J-1 to J-13.

Coordinates	Name	Value	Unit	Modbus Address
J-01	Serial 0 modus	Modbus		2099
J-02	Serial 0 baud rate	38400	baud	2100
J-03	Seriell 0 bits	8		2101
J-04	Serial 0 parity	NONE		2102
J-05	Modbus 0 protocol	RTU		2103
J-06	Modbus 0 HW mode	RS485		2104
J-07	Modbus 0 adresse	1		2105
J-08	Modbus 0 reg.offset	0		2106
J-09	Modbus 0 gap time	45		2118
J-10	Pressure application	OFF		2116
J-11	Lpt interval	10		2117
J-12	DZU-0 adress	1		2283
J-13	Serial 0 status	10		760

10.3.2 Interface 1

- Is intended for exchanging data with volume conversions.
- The parameterization is carried out using the coordinates J-14 to J-24.

Coordinates	Name	Value	Unit	Modbus Address
J-14	Serial 1 mode	DZU X-FRAME		2107
J-15	Serial 1 baud rate	9600	baud	2108
J-16	Serial 1 bits	8		2109
J-17	Serial 1 parity	NONE		2110
J-18	Modbus-1 protocol			
J-19	Not available			
J-20	Modbus-1 address			
J-21	Modbus-1 reg.offset			
J-22	Modbus-1 gap time			
J-23	DZU-1 address	2		2284
J-24	Serial 1 Status	10		770

10.3.3 Interface 2

- Is intended for communication with a Modbus Master.
- The parameterization is carried out using the coordinates J-25 to J-40.

Coordinates	Name	Value	Unit	Modbus Address
J-25	Opt. Ser2 modus	Modbus		2112
J-26	Opt. Ser2 baud rate	38400	baud	2113
J-27	Opt. Ser2 bits	8		2114
J-28	Opt. Ser2 parity	NONE		2115
J-29	Modbus-2 protocol	RTU		2178
J-30	Modbus-2 HW-mode	RS485		2179
J-31	Modbus 2 address	1		2180
J-32	Modbus 2 reg. offset	0		2181
J-33	Modbus 2 gap time	45		2182
J-34	Long Byte order	NORMAL		2251
J-35	Float Byte order	NORMAL		2252
J-36	Double Byte order	NORMAL		2253
J-37	DZU-2 Address	3		2285
J-38	seriel 2 Status			
J-39	DZU Interval	100	tics	2111
J-40	DZU Checksum Preset	0x00		2255

- Interface 2 can be configured as RS232 or RS485.
- Factory setting or default is RS485.

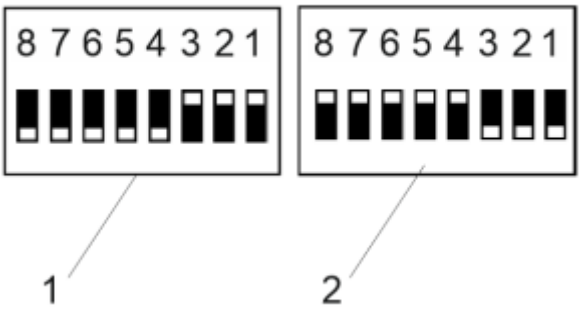

1 DIP switch RS232 configuration
2 DIP switch RS485 configuration

Fig. 10.8: Configuring interface with DIP switch

- The configuration is carried out via software (coordinate J-30) and hardware (switch).
- The DIP switch is located on the optional card in the ultrasonic electronics housing.

Communication as Modbus master

J-25 Mode Opt. Serial 2

To activate the Modbus Master, the mode must be set to Modbus master.

Fig. 10.9: Activation as Modbus master

Coordinates AW-08 and AW-09 indicate the time since of the last AGA10 calculation respectively the time of last update of the gas components.

USM_Ob: AW: AGA-10 Values

USM	Coordinate	Name	Value
USM_Ob	AW-8	last calculation	01.01.1970 01:00:00
USM_Ob	AW-9	last gas comp	01.01.1970 01:00:00

Fig. 10.10: Status information of the AGA-10 calculation

Using the coordinates AZ-01 Formula Methane to AZ-50 Formula Status the USM-input variables are linked to the PGC gas data.

USM-GT-400	Coordinates	Name	Value	Unit
USM_Ob	AZ-01	Formula Methane	F8252	
USM_Ob	AZ-02	Formula Methane		
USM_Ob	AZ-03	Formula Ethane	F8256	
USM_Ob	AZ-04	Formula Ethane		
USM_Ob	AZ-05	Formula Propane	F8258	
USM_Ob	AZ-06	Formula Propane		
USM_Ob	AZ-07	Formula I-Butane	F8260	
USM_Ob	AZ-08	Formula I-Butane		
USM_Ob	AZ-09	Formula N-Butane	F8262	
USM_Ob	AZ-10	Formula N-Butane		
USM_Ob	AZ-11	Formula Neo-Pentane	0	
USM_Ob	AZ-12	Formula Neo-Pentane		
USM_Ob	AZ-13	Formula I-Pentane	F8266	
USM_Ob	AZ-14	Formula I-Pentane		
USM_Ob	AZ-15	Formula l N-Pentane	F8268	
USM_Ob	AZ-16	Formula N-Pentane		
USM_Ob	AZ-17	Formula Hexane+	0	
USM_Ob	AZ-18	Formula Hexane+		
USM_Ob	AZ-19	Formula Oxygen	F8280	
USM_Ob	AZ-20	Formula Oxygen		
USM_Ob	AZ-21	Formula Helium	F8282	
USM_Ob	AZ-22	Formula Helium		
USM_Ob	AZ-23	Formula Hydrogene	F8284	
USM_Ob	AZ-24	Formula Hydrogene		
USM_Ob	AZ-25	Formula Argon	0	
USM_Ob	AZ-26	Formula Argon		
USM_Ob	AZ-27	Formula Nitrogen	F8250	
USM_Ob	AZ-28	Formula Nitrogen		
USM_Ob	AZ-29	Formula CO2	F8254	
USM_Ob	AZ-30	Formula CO2		
USM_Ob	AZ-31	Formula Hexane	0	
USM_Ob	AZ-32	Formula Hexane		
USM_Ob	AZ-33	Formula Heptane	0	

USM_Ob	AZ-34	Formula Heptane		
USM_Ob	AZ-35	Formula Octane	0	
USM_Ob	AZ-36	Formula Octane		
USM_Ob	AZ-37	Formula Nonane	0	
USM_Ob	AZ-38	Formula Nonane		
USM_Ob	AZ-39	Formula Decane	0	
USM_Ob	AZ-40	Formula Decane		
USM_Ob	AZ-41	Formula H2S	0	
USM_Ob	AZ-42	Formula H2S		
USM_Ob	AZ-43	Formula H2O	0	
USM_Ob	AZ-44	Formula H2O		
USM_Ob	AZ-45	Formula CO	0	
USM_Ob	AZ-46	Formula CO		
USM_Ob	AZ-47	Formula Ethene	0	
USM_Ob	AZ-48	Formula Ethene		
USM_Ob	AZ-49	Formula Propene	0	
USM_Ob	AZ-50	Formula Propene		
USM_Ob	AZ-51	Formula Status	u1038==0	
USM_Ob	AZ-52	Formula Status		
USM_Ob	AZ-53	Formula Status		
USM_Ob	AZ-54	Formula Status		
USM_Ob	AZ-55	MB Pause	20	s
USM_Ob	AZ-56	MB Timeout	1000	ms
USM_Ob	AZ-57	MB Int16Order	21	
USM_Ob	AZ-58	MB Int32Order	4321	
USM_Ob	AZ-59	MB FloatOrder	4321	
USM_Ob	AZ-60	MB DoubleOrder	43218765	

The USM-GT-400 combines the information of the PGC-register 8252 (= Register address component methane) with the coordinate AZ-01. Data type F8252 means that methane is delivered as a single-precision floating-point number (Float).

There are different data types: double-precision floating point = D (Double float), simple-precision floating point = F (Float), 32-bit unsigned integer = U (Long) and 16-bit unsigned integer = u (short).

USM	Coordinate	Name	Value
90156	AZ-1	Formula Methane	F8252
90156	AZ-2	Formula Methane	

Fig. 10.11: Gas component

Unit Conversion

An implemented formulary offers additional options for a conversion. Values from the PGC can be converted according to the requirements. For example to multiply the methane concentration (0.94) with 100 (94%) in coordinate AX-46 has to be selected F8252 * 100.

USM	Coordinate	Name	Value
90156	AZ-1	Formula Methane	F8252*100
90156	AZ-2	Formula Methane	

Fig. 10.12: Applying the unit conversion

Rules for distributing the gas components

Not all possible gas components can be filled. Then these gas components are to be distributed according to the distribution rules.

⇨ “Treatment of the gas data” on page 32

It might be possible that there is no input field in the USM-GT-400 for a measured gas component from the PGC, for example, Neo-pentane (register 8264). Neo - pentane will then be added to N-pentane (register 8268). Coordinate AZ-15 then has to be formulated as F8264 + F8268.

USM	Coordinate	Name	Value
90156	AZ-15	Formula N_Pentane	F8268+F8264
90156	AZ-16	Formula N_Pentane	

Fig. 10.13: Applied distribution rule

Rule for splitting gas components

If components as hexane, heptane, octane, nonane and decane are not given individually, but as a sum of hexane plus higher alkanes, eg Register in F8272, this sum can be split according to the rule of thirds to the components. Hexane, heptane, octane, nonane and decane are then distributed to 81: 27: 9: 3: 1. Normalized this results in 81/121: 27/121: 9/121: 3/121: 1/121. The coordinates AZ-31 to AZ-40 become to:

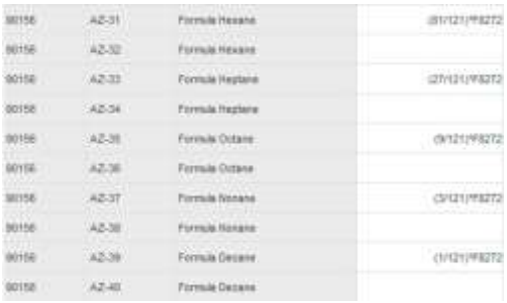

Fig. 10.14: Applied splitting rule

Beside addition and multiplication other mathematical rules such as division and bracket rules can be applied, too.

Constants

It might be possible that components required from the USM-GT-400 are not given from the PGC, for example water and hydrogen sulfide. These can be set to 0:

90156	AZ-41	Formula H2S	0
90156	AZ-42	Formula H2S	
90156	AZ-43	Formula Water	0
90156	AZ-44	Formula Water	

Fig. 10.15: Adjusting gas components

Remarks to the coordinates AZ-01 to AZ-50

The input of a coordinate, for example, AZ-01 can have a maximum of 20 characters. To specify more complex expressions two coordinate per gas component may be used, for example methane

- AZ-01 Formula_Methane0 (less significant)
- AZ-02 Formula_Methane1 (highly significant)

An expression with more than 20 characters begins with the less significant coordinate AZ-01 and then continues with one with higher significant AZ-02. Unused high-order coordinates are filled with spaces.

The formulas combining the USM-GT-400 input variables with the PGC data may not exceed a maximum of 60 Modbus registers.

AZ-51 Formula Status to AZ-54 Formula Status

For the PGC status could be required for example:

- Value = 1 The PGC measures without error
- Value = 0 The PGC is in alarm
- Value = 0 The PGC is in revision

It is possible that a PGC is not providing its status in this form. Instead, there may be:

Register 10: It shows the number of pending alarms. When showing 0 the PGC is free of alarms. It is a 16-bit integer register.

Register 2: It is a bit coded information. In the measuring mode of the PGC the bit is set to 4. It is a 32-bit integer register.

The following considerations help to formulate the state-formation in coordinate AZ51:

- The first part of a 16-bit integer registers will be imported. The number of pending alarms shows the data type of an unsigned integer (unsigned short int). The prefix is a small u. The register address is 10, therefore, the value u10 should be requested.

- The value is checked to be 0. The first term is found to be u10 == 0. The result is true if u10 contains a 0.
- For the second part, a 32-bit integer registers is imported. This value has to be read bitwise. It is a 32-bit unsigned integer (unsigned long int). The prefix is a large U. Register address is 2; the value U2 must be requested.
- Now it is checked whether any bit is set to 4. As operator the bitwise "and" has to be used (&). The second part of the expression results to U2 & 4. The result is 0 when the bit with the value 4 is not set and a value other than 0 is set. Bits with other values then 4 do not affect the result.
- The two partial expressions are joined via a logical "and" (&&). Following the bracket rules both subexpressions have to be put in brackets. The complete expression for AZ-51 is found to be (u10== 0)&&(U2&4).

Arithmetic Operators	Comparison Operators	Logical Operators	Bitwise Operators
Addition +	greater >	Logical And &&	Bitwise And &
Subtraction -	smaller <	baud	Bitwise Or |
Multiplication *	greater or equal >=	Logical Or ||	exclusive or ^
Division /	less or equal <=	Not!	Bitwise negation
Modulo %	equal ==		
Sign -	not equal to =!		

Terms may be

- a?b:c means: if a then b else c
- brackets: ()
- constants:
  Integers, for example, 42
  Floating point, for example, 1.234
  Exponential, for example, 1.2345E-3
  unsigned, the sign is realized by the operator sign

Information to the status of the PGC

The input field of coordinate AZ-51 accommodates a maximum of 20 characters. If this is insufficient for the formulation of a more complex expression, there are a total of four coordinates for the status.

AX-51 Formula Status (lowest significance)

AX-52 Formula Status (low significance)

AX-53 Formula Status (high significance)

AX-54 Formula Status (highest significance)

Entering a formula with more than 20 characters starts with the lowest order coordinate AZ-51 and then continues in the higher- AZ-52, AZ-53 and AZ-54. If the higher order coordinates are not needed, they are to be filled with spaces.

AX-92 MB_Pause: The requests of the USM-GT-400 to the PGC are summarized in a block. Between two blocks will be an interval. AX92 coordinate indicates the interval time.

AX-93 MB_Timeout: Maximum time between a PGC request and the associated response**.**

AX-94 MB_Int16Order: Adjustment of the byte order of 16-bit integers. A 16-bit value consists of two bytes, the least significant byte and the most significant byte. There are two settings: 12 and 21.

AX-95 MB_Int32Order: Adjustment of the byte order of 32-bit integers. A 32-bit value consists of four bytes. Common sequences are: 1234/2143/3412 / 4321. However, all other options can be set, too. For example, 4123.

AX-96 MB_FloatOrder: Adjustment of the byte order of single precision floating point numbers. A single-precision floating-point number consists of four bytes. Common sequences are: 1234/ 2143/3412 / 4321. However, all other options can be set, too. For example, 3124.

AX-97 MB_DoubleOrder: Adjustment of the byte order of double- precision floating point numbers. A double-precision floatingpoint number consists of eight bytes. Consistent Sequences are: 12345678/21436587/34127856/43218765/56781234/65872143/78563412 / 87654321. However, all other options can be set, too.For example, 81,726,354.

Note to the coordinates AX94 to AX97: The numbers represent the significance. It increases with the value of the byte. The sequence is read from left to right.

Fig. 10.16: Significance of the coordinates

AY-46 telegram counter: Here all correct PGC answers are counted.

AY-49 MB timeouts: Here the timeouts detected on the Modbus are counted. The counter is incremented when no PGC-answer arrives within the time set in AX-93.

AY-50 MB error-counter: Here all incorrect PGC answers are counted.

AY-51 MB error register: If an unexpected answer from the PGC arrives, this co-ordinate indicates the related Modbus register.

AY-52 MB error answer: Here the PGC answers are counted with exception code.

AY-55 MB_ErrorBits: This coordinate informs about problems occurring during the link of the USM-input variables with the PGC data. However displayed is a three-digit hexadecimal number instead of any bit combination.

Bit 0 - 7: If a link was formulated incorrectly, a coded number here indicates the first failed formula. Examples:

0 = formula methane is faulty
1 = formula nitrogen is faulty
6 = formula H2S is faulty

Bit 8: Reserved

Bit 9: 0 = no error.
1 = Error for the formulation.

Bit 10: Reserved

Bit 11: Reserved

Bit 12: In the formulas for linking the USM input variables with the PGC data more than 60 Modbus registers were used in total.

AY-56 MB_InStatus: Here the evaluation result of the status formula (AZ-51 to AZ-54) is given.

10.4 Modbus communication in detail

10.4.1 Codes supported

The ultrasonic electronics supports the following codes:

Function Code	Code	Description
	03 Hex	Read Holding Registers
	06 Hex	Preset Single Register
	10 Hex	Preset Multiple Registers
	08 Hex	Diagnostic
	00 Hex	Return Query Data

Exception Code	Code	Description
	03	Illegal Function
	03	Illegal Data Address (Register nicht vorhanden)
	03	Illegal Data Value (Register nicht beschreibbar oder Wert falsch)

10.4.2 Data types

Data type	Register	Value	Byte 1	Byte 2	Byte 3	Byte 4	Byte 5	Byte 6	Byte 7	Byte 8
float	2	273,15	0x93	0x33	0x43	0x88				
text	10	USM GT400	0x53	0x55	0x30	0x5A	0x2D	0x38	0x50	0x36
			0x00	0x00	0x00	0x00	0x00	0x00	0x00	0x00
			0x00	0x00	0x00	0x00				
intd	1	44067	0xAC	0x23						
double	4	14,2740	0x13	0x58	0x8A	0xCF	0x8C	0x4C	0x40	0x2C
long	2	100000	0x86	0xA0	0x00	0x01				

Example (question / answer)

Question	Modbus - ASCII	Modbus - RTU	
Start Char	:		
Slave Address	01	01	
Function	03	03	
Starting Address Hi	0F	0F	
Starting Address Lo	A2	A2	Register = 4002 (0FA2)
No. of Points Hi	00	00	
No. of Points Lo	01	01	Amount = 0001 (0001)
LRC / CRC	42	26	
carriage return	CR	FC	
line feed	LF		
Reply:			
Start Char	:		
Slave Address	01	01	
Function	03	03	
Byte Count	02	02	
Data Hi (Reg 2000)	A8	A8	
Data Lo (Reg 2000)	01	01	Wert = A801
LRC	51	06	
carriage return	CR	44	
line feed	LF		

10.5 Configuration of the current output

The connection of external devices to the current output of the meter is to be carried out as described in chapter 8.3 Connecting the device electrically.

The parameters are then set in column 'I Current Output' of the coordinate matrix as follows:

1. Enter the code number.
2. Look up the Modbus address of the physical quantity (measured or calculated value) to be output in the parameter list or with the RMGView^{USM} operating software under "Values". Then enter this **Modbus address** in coordinate **I-06** (c-out select).
3. In coordinate **I-07** (c-out mode), select the **operating mode** of the current output (0-20mA or 4-20mA). With "SET VALUE" a constant current can be output, the value of which is set in coordinate I-05 (c-out set value).
4. In coordinate **I-03** (c-out min.), enter the **minimum value** for the physical quantity at which 0 or 4 mA should be output.
5. In coordinate **I-04** (c-out max.), enter the **maximum value** for the physical quantity at which 20 mA should be output.
6. In **I-08** (c-out err mode) it can then be determined whether the minimum value, the maximum value or 0 should be output in the event of an error.

The damping value in I-09 can be used to specify how quickly the output current reacts to a change in the physical quantity. The fastest possible reaction occurs with the value of 0.

10.6 List of the measurement values and parameters

The lists for parameter and measured values are in appendix 18.

11 Maintenance

In this chapter, you are provided with information as to how you can extend the service life of the device through maintenance. You can only protect the device against premature wear when observing the maintenance schedules described here.

Content

11.1 Maintenance schedule 165

11.2 Checking the device for leaks 165

11.3 Checking the device for any signs of damage 166

11.4 Changing the battery 166

11.5 Changing the transducer 166

11.6 Changing the ultrasonic electronics 167

11.7 Cleaning the device 167

11.8 Check the official seal 168

11.9 Decommissioning and disposal 168

11.1 Maintenance schedule

The maintenance schedule specifies the intervals in which the maintenance work has to be carried out in order to maintain the function of the device.

Interval	Activity
Weekly	• Check that the official seal has not been tampered with (this time interval can be extended to a meaningful length).
As required	• Clean the device. • Check the plug connections and screw connections for leaks and tight fit, where necessary, replace the seals.
Every 5 to 10 Years	• Check the device for leaks. Please perform a leakage check each time the device has been physical touched.
On consultation with RMG.	• Check the device for leaks. The leak tightness of the device may be limited if non-approved gas types are used. In these cases, please contact RMG.

11.2 Checking the device for leaks

For safe operation, the device must be sent back to RMG every 5 to 10 years to check for leaks.

In the course of a recalibration from RMG, the device will also be checked for leaks at the same time.

If the device is used with the permitted gases, the service life of the seals is unlimited.

⇨ *Chapter 13.2, “*Approved gas types*” on page 180*

If other gases are used, please contact RMG.
RMG service will provide you with an interval for the leak test for the interaction with the ultrasonic gas meter and the gas type used.

1 Pack the device for transport and shipping to RMG correctly.

⇨ Chapter 6.2, „Packing the device for transportation“ on page 73

11.3 Checking the device for any signs of damage

The device must only be used in a technically sound state.

- **Checking the device**

1. Perform a visual check of the ultrasonic electronics viewing window.

   The viewing window must be free of cracks and complete.

2. Perform a visual check of the transducer covers.

   The covers must be free of cracks and breaking points.

3. Perform a visual check of the ultrasonic gas meter housing.

   The housing must be free of damage resulting from mechanical influences.

11.4 Changing the battery

The ultrasonic electronics contains a battery which keeps date and time when no power is available. If the battery is empty, the setting for the time and date are lost.

1. Have the empty battery changed by the RMG service.

Notice

Recommendation: The battery should be changed on the regular base of recalibration but latest each 10 years.

11.5 Changing the transducer

Danger

Mortal danger from incorrect replacement of the transducer
If transducers of a system under pressure are not changed correctly, this may cause an explosion. Escaping gas may lead to intoxication.

- Change the transducer only if you have obtained a training from RMG for this activity.
- Observe the separate service instructions for changing the transducer.

The special tool from RMG must be used for changing the transducers.

You can find out more about changing the transducers with the tool here:

⇨ *Service manual for changing the transducers and ultrasonic electronics (separate document)*

11.6 Changing the ultrasonic electronics

Danger

Mortal danger from incorrect replacement of the transducer
If transducers of a system under pressure are not changed correctly, this may cause an explosion. Escaping gas may lead to intoxication.

- Change the transducer only if you have obtained a training from RMG for this activity.
- Observe the separate service instructions for changing the transducer.

You can find out more about changing the ultrasonic electronics here:

⇨ *Service manual for changing the transducers and ultrasonic electronics (separate document)*

11.7 Cleaning the device

Notice

Malfunction from soiling
If the device is soiled on the inside, it cannot function correctly. This may lead to incorrect measuring values or a failure.

- Have a device that is contaminated on the inside only cleaned by RMG service or by personnel that have been especially trained by RMG.

Damage to the device from incorrect cleaning agent
If the device is cleaned with cleaning agent containing solvents or other unsuitable agents, the paint or plastic parts become brittle, for example.

- Use gentle cleaning agents that are suitable for glass surfaces, metal and plastic.

- **Performing cleaning**

1 Free the device from rough and lose dirt with a soft brush.

2 Clean the viewing window of the ultrasonic electronics with a moist cloth.

11.8 Check the official seal

The official seals must be available and must not be damaged for calibrated operation.

- **Perform a visual check of the official seals**

1 Check that the official seals are intact and complete in a visual inspection.

The positions of the official seals can be found here:

⇨ Chapter 13.7, “Official seal diagram” on page 192

11.9 Decommissioning and disposal

Danger

Mortal danger from disassembly in potentially explosive environment.
If the device is disassembled in a potentially explosive environment for disposal, resulting sparks may lead to an explosion.
- Disassemble the device only in an explosion-proof area.

Warning

Risk of injury from work carried out incorrectly
During decommissioning and removal work, there is a risk of severe injuries from components under pressure and highly explosive atmospheres if the system has not been correctly disconnected from the gas supply network and the power supply in advance.
- Before starting work, switch off the device and secure it against being switched back on.
- Depressurize the device.
- Only specialist personnel are allowed to undertake the decommissioning.

Observe the applicable national and local guidelines for disposal. Ask your local authorities about the legal guidelines at your company location as well as about the regional disposal companies or collecting points.

The device mainly comprises materials that can be disposed of as old metal. In the following we shall specify the components that may not be disposed of as old metal.

Ultrasonic electronics

Electric components are contained in the housing of the ultrasonic electronics that must be disposed of as electric waste. In order to remove the ultrasonic electronics, you have to remove the cover of the ultrasonic electronics.

⇨ *Chapter 10.2.3, “Opening the cover of the ultrasonic electronics” on page 145*

Battery

The battery is attached to the PCB of the ultrasonic electronics. In order to remove the battery, you have to remove the cover of the ultrasonic electronics.

⇨ *Chapter 10.2.3, “Opening the cover of the ultrasonic electronics” on page 145*

Transducer

The transducer comprises titanium, plastic and heavy metals (e.g., lead in piezo crystal). The transducers must be disposed of according to the applicable national and local guidelines.
In order to remove the transducers, RMG service shall inform you of the procedure.

⇨ *„Manufacturer“ on the inside cover*

12 Alarm and warning messages

In this chapter, you will find out which information, alarm and warning messages can be displayed. In this chapter, you will also find out how to eliminate problems with the RMG components.

Content

12.1 Alarm messages **171**

12.2 Warning messages **172**

0

Notes **175**

12.4 Troubleshooting **175**

171

Active warning messages are displayed with a + in front of the message number.

Warning messages that can be acknowledged are displayed with a - in front of the message number.

12.1 Alarm messages

No.	Message	Explanation
0	No errors	Trouble-free operation
1	Power failure	Temporary power failure
2	FPGA Timeout	FPGA communication: FPGA does not answer
3	FPGA CRC	FPGA-communication: faulty checksum
4	DSP-SPI Timeout	DSP-communication: Serial Peripheral Interface (Databus) of the digital Signal processor does not respond.
5	DSP-SPI CRC	DSP-communication: faulty checksum at SPI
6	DSP no data	No DSP measuring data arrives
7	DSP R-length	DSP-communication: Telegram length invalid
8	DSP	Critical DSP fault. Faulty bits can be read-off separately with DSP faults
9	FPGA	Critical FPGA fault. Faulty bits can be read-off separately with FPGA faults
10	COM-0	Fault with data transmission via interface COM-0
11	COM-1	Fault with data transmission via interface COM-1
12	COM-2	Fault with data transmission via interface COM-2
13	COM-3	Fault with data transmission via interface COM-3
14	AD converter	Fault at analog digital converter of the option card 2
15	Option card	Fault at the option card 1
16	Meter invalid	Meter invalid
17	Replacement value invalid	Replacement value of the path reconstruction invalid
18	F-RAM invalid	Checksum of the F-RAM telegram invalid
19	F-RAM length	Length of the F-RAM telegram invalid
20	opt. Data crc	Checksum of the data from the option card invalid
21	ADCData crc	Checksum of the data from the AD converter invalid
22	Iout min/max	Min/Max limits of the power output violated
23	Send level min	Send level too low
24	DSP version	DSP SW version not compatible with M32 SW version
25	FPGA version	FPGA version not compatible with M32 SW version
26	LOGP invalid	Parameter in log memory invalid
30	Path 1 failure	Measuring path 1 failed
31	Path 2 failure	Measuring path 2 failed

No.	Message	Explanation
32	Path 3 failure	Measuring path 3 failed
33	Path 4 failure	Measuring path 4 failed
34	Path 5 failure	Measuring path 5 failed
35	Path 6 failure	Measuring path 6 failed
36	Path 7 failure	Measuring path 7 failed (spare)
37	Path 8 failure	Measuring path 8 failed (spare)
38	max. path	Maximum permissible number of path failures exceeded
40	Replacement value not cal.	Replacement value for failed path could not be calculated
41	USE09 Timeout	No valid measurement, all measuring paths have failed.
42	ADC temperature	ADCfault temperature input
43	ADC pressure	ADC fault pressure input
45	I1 Out min/max	Power outlet outside the min. / max. limits
47	Temp. min/max	Temperature outside the min. / max. limits
48	Pressure min/max	Pressure outside the min. / max. limits
50	DSP path 1	Critical path error. Error bits can be read-off separately in Path 1 error
51	DSP path 2	Critical path error. Error bits can be read-off separately in Path 2 error
52	DSP path 3	Critical path error. Error bits can be read-off separately in Path 3 error
53	DSP path 4	Critical path error. Error bits can be read-off separately in Path 4 error
54	DSP path 5	Critical path error. Error bits can be read-off separately in Path 5error
55	DSP path 6	Critical path error. Error bits can be read-off separately in Path 6 error
56	DSP path 7	Critical path error. Error bits can be read-off separately in Path 7 error (spare)
57	DSP path 8	Critical path error. Error bits can be read-off separately in Path 8 error (spare)
60	P1 AGC limit	Amplification factor for path 1 outside the permissible limits
61	P2 AGC limit	Amplification factor for path 2 outside the permissible limits
62	P3 AGC limit	Amplification factor for path 3 outside the permissible limits
63	P4 AGC limit	Amplification factor for path 4 outside the permissible limits
64	P5 AGC limit	Amplification factor for path 5 outside the permissible limits
65	P6 AGC limit	Amplification factor for path 6 outside the permissible limits
66	P7 AGC limit	Amplification factor for path 7 outside the permissible limits (spare)
67	P8 AGC limit	Amplification factor for path 8 outside the permissible limits (spare)
77	QVb min. Grenze	Operating volume flow below Qmin
78	QVb max. limit	Operating volume flow above Qmax
99	Wrong Parm.	Parameter entered is invalid

12.2 Warning messages

No.	Messages	Explanation
100	Path1 Warn.	Proportion invalid measurements for path 1 too high

No.	Messages	Explanation
101	Path2 Warn.	Proportion invalid measurements for path 2 too high
102	Path3 Warn.	Proportion invalid measurements for path 3 too high
103	Path4 Warn.	Proportion invalid measurements for path 4 too high
104	Path5 Warn.	Proportion invalid measurements for path 5 too high
105	Path6 Warn.	Proportion invalid measurements for path 6 too high
106	Path7 Warn.	Proportion invalid measurements for path 7 too high (spare)
107	Path8 Warn.	Proportion invalid measurements for path 8 too high (spare)
108	RTC Hardware	Hardware fault to the real time clock
109	Ext. Warning	External warning
110	P1 V min/max	Flow velocity from path 1 outside the min./max. limits
111	P2 V min/max	Flow velocity from path 2 outside the min./max. limits
112	P3 V min/max	Flow velocity from path 3 outside the min./max. limits
113	P4 V min/max	Flow velocity from path 4 outside the min./max. limits
114	P5 V min/max	Flow velocity from path 5 outside the min./max. limits
115	P6 V min/max	Flow velocity from path 6 outside the min./max. limits
116	P7 V min/max	Flow velocity from path 7 outside the min./max. limits (spare)
117	P8 V min/max	Flow velocity from path 8 outside the min./max. limits (spare)
118	work.mode test	Counter runs in test mode
120	P1 C min/max	Speed of sound from path 1 outside the min./max. limits
121	P2 C min/max	Speed of sound from path 2 outside the min./max. limits
122	P3 C min/max	Speed of sound from path 3 outside the min./max. limits
123	P4 C min/max	Speed of sound from path 4 outside the min./max. limits
124	P5 C min/max	Speed of sound from path 5 outside the min./max. limits
125	P6 C min/max	Speed of sound from path 6 outside the min./max. limits
126	P7 C min/max	Speed of sound from path 7 outside the min./max. limits (spare)
127	P8 C min/max	Speed of sound from path 8 outside the min./max. limits (spare)
130	P1.1 amplitude	Amplitude of the signal from sensor 1.1 too small
131	P2.1 amplitude	Amplitude of the signal from sensor 2.1 too small
132	P3.1 amplitude	Amplitude of the signal from sensor 3.1 too small
133	P4.1 amplitude	Amplitude of the signal from sensor 4.1 too small
134	P5.1 amplitude	Amplitude of the signal from sensor 5.1 too small
135	P6.1 amplitude	Amplitude of the signal from sensor 6.1 too small
136	P7.1 amplitude	Amplitude of the signal from sensor 7.1 too small (spare)
137	P8.1 amplitude	Amplitude of the signal from sensor 8.1 too small (spare)
140	P1.2 amplitude	Amplitude of the signal from sensor 1.1 too small
141	P2.2 amplitude	Amplitude of the signal from sensor 2.1 too small
142	P3.2 amplitude	Amplitude of the signal from sensor 3.1 too small
143	P4.2 amplitude	Amplitude of the signal from sensor 4.1 too small
144	P5.2 amplitude	Amplitude of the signal from sensor 5.1 too small
145	P6.2 amplitude	Amplitude of the signal from sensor 6.1 too small
146	P7.2 amplitude	Amplitude of the signal from sensor 7.1 too small (spare)
147	P8.2 amplitude	Amplitude of the signal from sensor 8.1 too small (spare)
150	Pfad1 delta c	Deviation from the speed of sound in path 1 from the average speed of sound too large

No.	Messages	Explanation
151	Pfad2 delta c	Deviation from the speed of sound in path 2 from the average speed of sound too large
152	Pfad3 delta c	Deviation from the speed of sound in path 3 from the average speed of sound too large
153	Pfad4 delta c	Deviation from the speed of sound in path 4 from the average speed of sound too large
154	Pfad5 delta c	Deviation from the speed of sound in path 5 from the average speed of sound too large
155	Pfad6 delta c	Deviation from the speed of sound in path 6 from the average speed of sound too large
156	Pfad7 delta c	Deviation from the speed of sound in path 7 from the average speed of sound too large (spare)
157	Pfad8 delta c	Deviation from the speed of sound in path 8 from the average speed of sound too large (spare)
170	P1 AGC delta	Deviation from the amplification factor in path 1 from the average amplification factor too large
171	P2 AGC delta	Deviation from the amplification factor in path 2 from the average amplification factor too large
172	P3 AGC delta	Deviation from the amplification factor in path 3 from the average amplification factor too large
173	P4 AGC delta	Deviation from the amplification factor in path 4 from the average amplification factor too large
174	P5 AGC delta	Deviation from the amplification factor in path 5 from the average amplification factor too large
175	P6 AGC delta	Deviation from the amplification factor in path 6 from the average amplification factor too large
176	P7 AGC delta	Deviation from the amplification factor in path 7 from the average amplification factor too large (spare)
177	P8 AGC delta	Deviation from the amplification factor in path 8 from the average amplification factor too large (spare)

12.3 Notes

No.	Message	Explanation
181	Sys. Temp Min	System temperature to low
182	Sys. Temp Max	System temperature to high
183	Rawdata len	Length of the raw data telegram wrong
184	Rawdata crc	Checksum of the raw data telegram wrong
185	P-LOG full	Parameter log memory full
186	DSP-info len	Length of the DSP info telegram wrong
187	DSP-info crc	Checksum of the DSP info telegram wrong
188	SoS calc. status	Status of the SoS calculation

12.4 Troubleshooting

If you cannot find a solution to your problem with the RMG component in the table below, then please contact the RMG service.
⇨ „Manufacturer“ on the inside cover

If problems cannot be eliminated, please contact RMG service.

- Note the active message (number and text) in order to be able to discuss the problem with RMG service.

No.	Description
45	The current output is freely configurable (is only code word protected). Violating the limit value may occur in an otherwise trouble-free operation if the limits are selected too close together. In this case, the limits can simply be adjusted. The limits are set ex-factory in such a manner that they correspond with the limit values of the assigned measured values, e.g., flow. A limit value violation occurs at the current outlet only if the meter, for example, is run-over and thus also reports a QVb max error (No.78).
60-65	AGC limits can be violated if an actual fault is at hand on the sensors or it is simply caused by the operating conditions. In order to limit the cause, one should compare the values of all paths in L-16/17 to Q-16/17. If only the AGC value of a single path deviates then one has to expect a defect. If all paths are affected then the cause may be contamination or condensation deposits on the transducer heads or, also an operating pressure that is simply too low if, for example, the system has not been applied yet. If the actual operating pressure deviates significantly from that previously specified, the parameters must be adjusted by the service. For extremely fluctuating operating conditions, there is an option for switching the attenuator on and off automatically here, which does not always lead to an optimum setting of the gain as this is only a 2-point regulation

No.	Description
78	QVb max limit appears when the meter is actually run. Then all measuring paths in L-7 to Q-7 should supply respectively high flow velocities. If only one values stands significantly out here then it is probably a malfunction of the path affected.
100-105	Path errors occur if one or more of the criterion monitored are violated permanently so that the content of valid measurement falls below the permitted limit value. If all measuring paths are affected at the same time, the cause for this is usually due to unsuitable operating conditions. If, for example, high-pressure gas is not applied to the system, but it is filled with nitrogen at atmospheric pressure, path error messages are activated as the limit value for the gain (AGC limit) is exceeded as well as the speed of sound may fall short or the signal leaves the permissible range of the evaluation window. Change the operating conditions or have the parameters adapted to the desired mode of operation (service deployment)! Contamination or the accumulation of condensation may also be a possibility. Errors on an individual path typically indicate a malfunction or a defect of the affected transducer or the corresponding wiring. Check the wiring and plug connectors! Only qualified personnel must change the transducer!
110-115	The flow velocity of the single paths measured are monitored at the limit values ± 50 m/s. If this is a tangible exceeding of the limit value by the actual flow velocity or it is a malfunction of an individual path, can be determined by comparing the single measurements in L-7 to Q-7. A subsequent error is no. 78.
120-125	The speed of sound of the single paths measured are monitored at the limit values ± 500 m/s. When using a gas (e.g., hydrogen) that deviates strongly with regard to the speed of sound, a parameterization must be carried out (service). If strongly deviating speed of sound are to be expected, the function "Signal Tracking" can also be activated in AI-27 that then adjusts the respective speed of sound range of the evaluation window. In case of a path error 100-105, the speed of sound is set to 0 so that the path can also be clearly identified as faulty on the basis of the measuring value, even if the reconstructed path velocity with the aid of the replacement-value function appears plausible.
130-135 und 140-145	These additional messages are helpful in faulty path cases (100-105) in order to determine the defective transducer of the path affected. Naturally, these error messages are also triggered if the evaluation electronics were defective, but then, all at the same time.
150-155 und 170-175	The monitoring of individual paths with regard to their deviation from the average values with respect to measuring variable such as speed of sound and gain (AGC = automatic gain control) serves the premature recognition of possible irregularities. Thus, one has the option to already identify conspicuous paths when the limit values relevant for the calibration have not been violated for the validity of the measurement yet. Possible causes are identical with those described in 100 -125.

13 Technical specifications

In this chapter you will receive information on the performance data of the device.

Content

13.1 Performance data **178**

13.2 Approved gas types **180**

13.2.1 Suitability and safety for natural gas containing H2 180

0

Approved measuring range according to MID **181**

13.4 Type plate 182
13.4.1 Type plate ATEX / IECEx 183
13.4.2 Type plate NEC (CSA) 184

13.5 Weights and dimensions 184
13.5.1 NEC (CSA) 185
13.5.2 ATEX / IECEx 186
Fehler! Verweisquelle konnte nicht gefunden werden. Fehler! Verweisquelle konnte nicht gefunden werden. Fehler! Textmarke nicht definiert.

13.6 Inner diameter of connecting spool pieces 189

13.7 Official seal diagram 192
13.7.1 Type plate 192
13.7.2 Ultrasonic electronics 193
13.7.3 Ultrasonic gas meter 195

13.8 Transducer types 197

13.1 Performance data

Power supply	Measuring element:	24 VDC
Power consumption	Measuring element:	typical 7-9 W; with heated display, typically 12 W; max. 15 W
Protection class	IP 66	
Interfaces	RS 485 0 (for RMGView^{USM}):	9600 / 19200 / 38400 / 57600 Baud
	RS 485 1 (for Modbus ASCII, RTU or Flow Computer)	9600 / 19200 / 38400 / 57600 Baud
	RS 485 2 (for Modbus ASCII, RTU or Flow Computer)	9600 / 19200 / 38400 / 57600 Baud

Current output	U_{max}= 16 V	Load resistance: max. 400 Ω
Pulse output	U_{max}= 30 V	f_{max}= 5 kHz
Sensor frequency	200 kHz (DN100 / 4“ and DN150 / 6“) or 120 kHz (DN200 / 8“ and larger)	
Flow velocity	-40 to + 40 m/s	
Gas temperature range	-40 C to +80 C (-40 F to 176 F)	
Maximum operating pressure	observe the details on the type plate.	
Ambient conditions	-40 C to +55 C (-40 F to 131 F)	

13.2 Approved gas types

The device must only be operated with the following gas types.
Safe operation is only guaranteed with the gas types specified:

- gases of class 1
- gases of class 2
- gases of class 3

The components of the gases must be within the concentration limits for test gases according to EN 437:2009 or similar national standards.

The national standards of other countries demand similar gas type specifications.

Notice

In general, the gas to be measured must not build any condensates in the operating range of the USM (flow, pressure and temperature range) and must be free of corrosive and aggressive components, liquids and solids. In case of deviating conditions a suitable operation has to be agreed with the RMG service.

13.2.1 Suitability and safety for natural gas containing H2

The USM GT400 can be used in hydrogen-containing natural gas. There are no safety-related concerns for this use.

Notice

**In accordance with the German TR-G19 – the USM GT400 is suitable and approved for use in custody transfer applications –
in natural gases with a maximum hydrogen content of 10 mol-% without a loss of the accuracy.**

Since there are currently no certified test rigs in Germany to calibrate meters with higher hydrogen-containing gases, an accuracy above 10 mol-% cannot be tested or certified.

Not custody transfer measurements are of course possible in natural gases with a hydrogen content above 10 mol%. However, a reduced measuring range must be taken into account if applicable. Please contact RMG for further information.

13.3 Approved measuring range according to MID

Nominal diameter		Measuring range (m³/h) / (acfh)		Extended measuring range (m³/h) / (acfh) *1	
mm	inches	Q_{max}	Q_{min}	Q_{min}	
80	3	650 / 23000	5 / 175	(2,5 / 88)	in preparation
100	4	1000 / 35320	8 / 208	(4 / 140)	in preparation
150	6	2400 / 84760	20 / 700	(10 / 350)	in preparation
200	8	4200 / 148350	32 / 1130	16 / 560	
250	10	6600 / 233100	50 / 1750	25 / 880	
300	12	9400 / 332000	70 / 2450	35 / 1240	
350	12	11400 / 403000	90 / 3180	45 / 1590	
400	16	15000 / 530000	120 / 4230	60 / 2120	
450	12	19000 / 670700	150 / 1750	75 / 2650	
500	20	23500 / 830000	180 / 6350	90 / 3180	
600	24	34000 / 1201000	260 / 9175	130 / 4590	
650	26	45000 / 1588000	340 / 12010	170 / 6000	
700	28	52000 / 1834800	420 / 14335	210 / 7400	
750	30	60000 / 2115000	460 / 16230	320 / 8100	
800	32	68000 / 2399000	550 / 19250	550 / 19250	
900	36	86000 / 3030000	700 / 24500	700 / 24500	
1000	40	108000 / 3800000	850 / 29750	850 / 29750	

*1 The extended measuring range only effects Qmin. It can be used at pressures above p ≥ 4 bar / p ≥ 60 psi.

For meters with a full bore inner diameter according to Di-2 in the table at the end of chapter 13.5, the table values for Q_{min} and Q_{max} are to be increased by a factor of 1.1.

The number of acoustic paths is 6 for all variants.

13.4 Type plate

1 Type plate

Fig. 13.1: Position of the type plate

The following details can be found on the type plate:

13.4.1 Type plate ATEX / IECEx

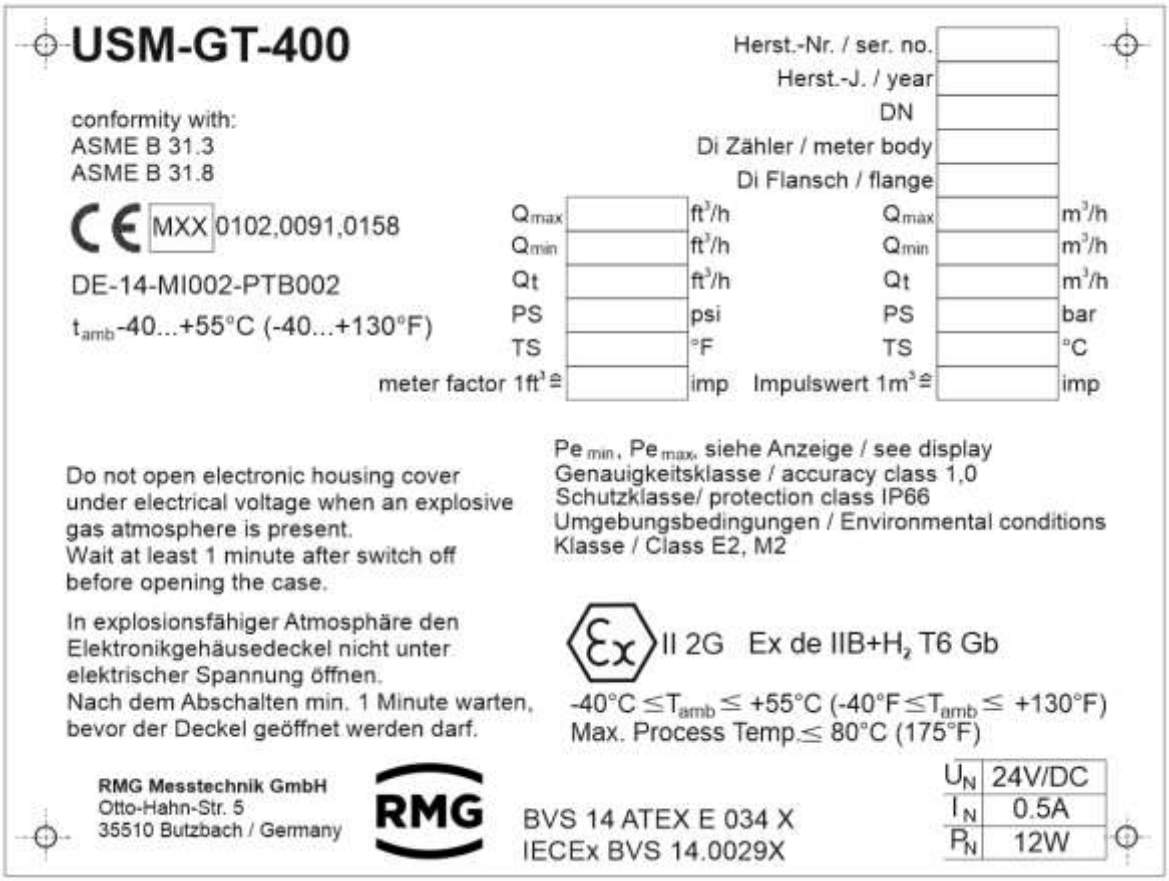

Fig. 13.2: Type plate ATEX / IECEx

13.4.2 Type plate NEC (CSA)

Fig. 13.3: Type plate NEC (CSA / FM)

13.5 Weights and dimensions

In this chapter you will receive information on the dimensions for the versions NEC and ATEX /IECEx.

ANSI pressure stages: The flange connecting dimensions comply with the standard ASME B 16.5.
DIN pressure stages: The flange connecting dimensions comply with the standard DIN EN 1092.

13.5.1 NEC (CSA)

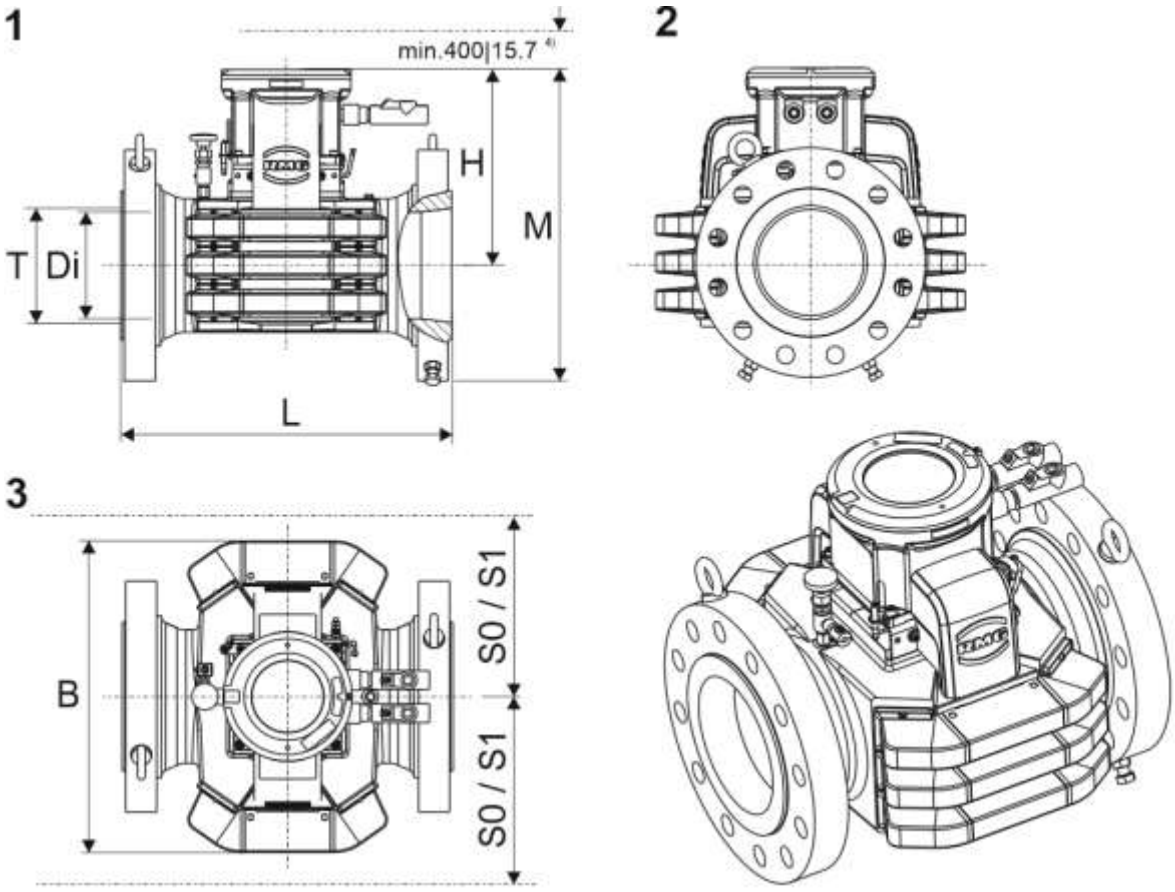

1 Front view
2 Side view
3 Top view

Space requirements for sensor exchange
S0: at non pressure flowmeter
S1: Flowmeter under pressure (with special tool)

Fig. 13.4: Weights and dimensions NEC

The version NEC and version ATEX / IECEx have identical dimensions. The table of the versions can be found on the following location:
Fehler! Verweisquelle konnte nicht gefunden werden.*188*

13.5.2 ATEX / IECEx

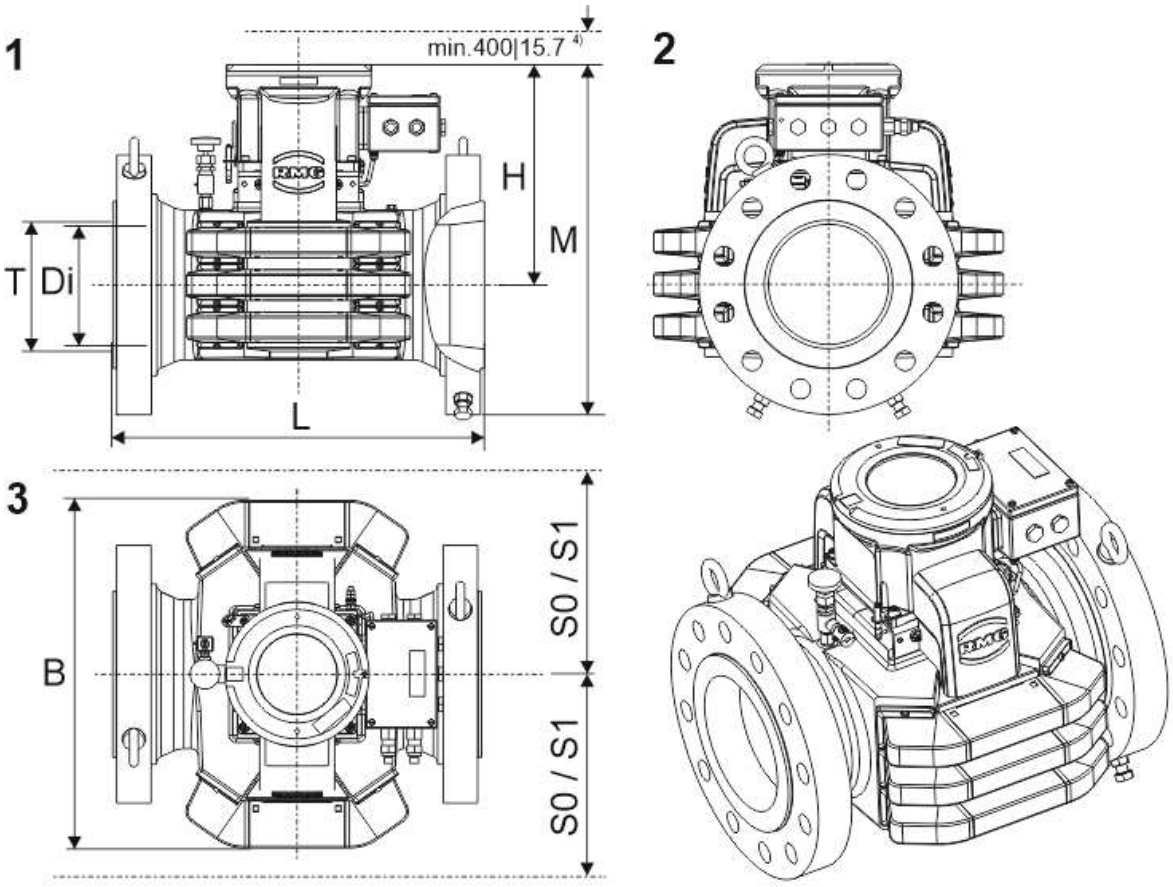

1 Front view
2 Side view
3 Top view

Space requirements for sensor exchange
S0: at non pressure flowmeter
S1: Flowmeter under pressure (with special tool)

Fig. 13.5: Weights and dimensions NEC

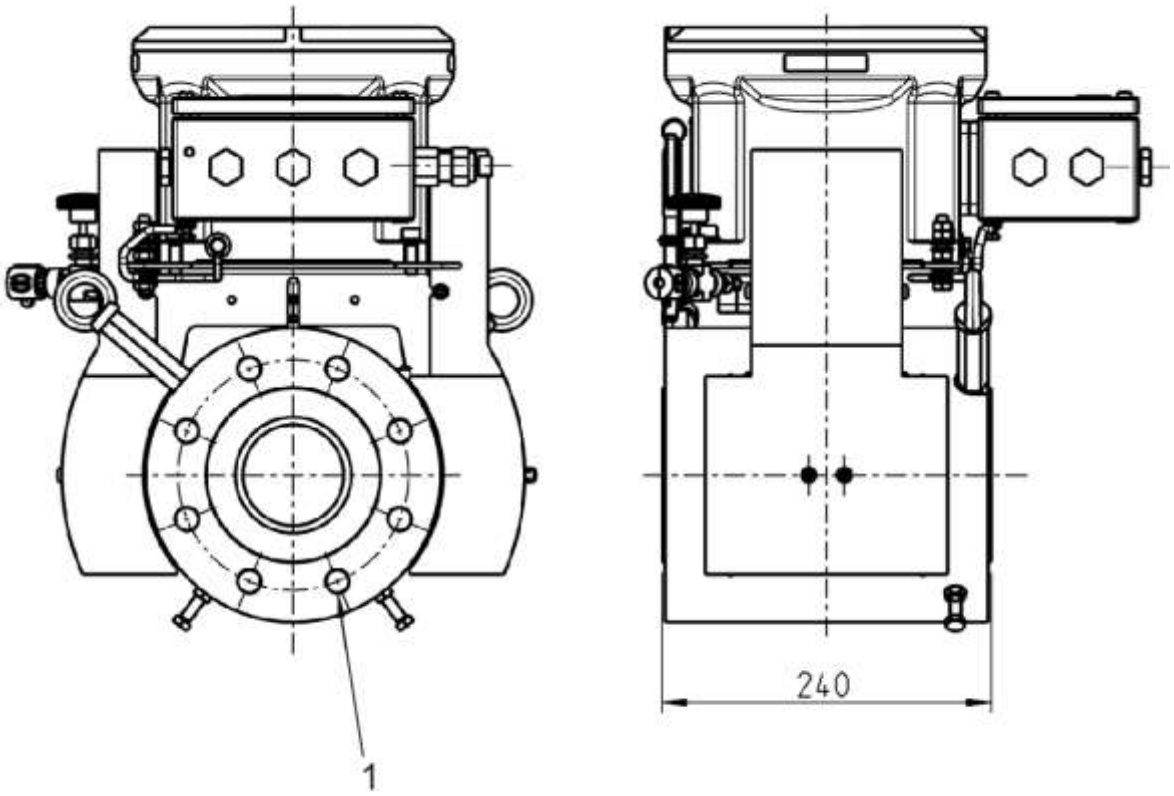

1 Threaded blind hole

Fig. 13.6: Weights and dimensions DN80

Due to the different sizes of the individual components, the device in DN80 is shown separately.

Dimensions - Version NEC and ATEX / IECEx

DN	L	L ANSI900	Di-1	Di-2	T[1]	H[2]	B[2]	B[2] ANSI 900	SO[2]	S1[2]	Weight[3]	Weight[3] ANSI 900
80 (3)	240 (9.5)	-	73.7 (2.9)	77.9 (3.07)	82.5 (3.25)	450 (17.72)	450 (17.72)	-	225 (8.86)	-	75 (165)	-
100 (4)	300 (11.81)	400 (15.75)	97.2 (3.83)	102.3 (4.03)	107.1 (4.22)	330 (12.99)	595 (23.43)	415 (16.34)	250 (9.84)	-	100 (220)	125 (276)
150 (6)	450 (17.72)	450 (17.72)	146.4 (5.76)	154.1 (6.07)	159.3 (6.27)	340 (13.39)	470 (18.5)	470 (18.5)	300 (11.81)	-	160 (353)	180 (397)
200 (8)	600 (23.62)	800 (31.5)	193.7 (7.63)	202.7 (7.98)	207.3 (8.16)	360 (14.17)	530 (20.87)	565 (22.24)	375 (14.76)	1520 (59.84)	300 (661)	380 (838)
250 (10)	750 (29.53)	1000 (39.37)	242.8 (9.56)	254.5 (10.02)	260.4 (10.25)	380 (14.96)	650 (25.59)	615 (24.21)	400 (15.75)	1550 (61.02)	450 (992)	560 (1235)
300 (12)	900 (35.43)	900 (35.42)	288.8 (11.37)	303.2 (11.94)	309.7 (12.19)	395 (15.55)	700 (27.56)	660 (25.98)	425 (16.73)	1575 (62.01)	550 (1213)	670 (1477)
350 (14)	1050 (41.34)	-	284-348 (11.2-13.7)	333.5 (14.31)	-	420 (16.54)	730 (28.74)	-	450 (17.72)	1600 (62.99)	700 (1543)	-
400 (16)	1200 (47.24)	1200 (47.24)	363.5 (14.31)	381.0 (15.0)	292.2 (11.50)	500 (19.69)	750 (29.53)	750 (29.53)	475 (18.70)	1620 (63.78)	950 (2094)	1050 (2315)
450 (16)	1350 (53.15)	-	367-449 (14.4-17.7)	428.7 (16.88)	-	530 (20.87)	820 (32.28)	-	500 (19.69)	1650 (64.96)	1000 (2205)	-
500 (20)	1500 (59.06)	1500 (59.06)	455.6 (17.94)	477.8 (18.81)	493.8 (19.44)	550 (21.65)	900 (35.43)	860 (31.5)	525 (20.67)	1670 (65.75)	1500 (3307)	1650 (3638)
600 (24)	1200 (47.24)	1500 (59.06)	547.7 (21.56)	574.7 (22.63)	595.8 (23.46)	550 (21.65)	1000 (39.37)	1045 (41.14)	600 (23.62)	1725 (67.91)	1550 (3417)	2500 (5512)
650 (26)	1200 (47.24)	-	632-648 (24.9-25-5)		-	680 (26.77)	1040 (40.94)	-	610 (24.02)	1740 (68.5)	1650 (3638)	-
700 (28)	1200 (47.24)	-	679-699 (26.8-27.5)		-	700 (27.56)	1050 (41.34)	-	615 (24.21)	1750 (68.9)	1800 (3968)	-
750 (30)	1500 (59.06)	-	730-749 (28.8-29.5)		-	800 (31.5)	1100 (43.31)	-	650 (25.59)	1780 (70.08)	1900 (4189)	-
800 (32)	1500 (59.06)	-	778-800 (30.6-31.5)		-	850 (33.46)	1150 (45.28)	-	675 (26.57)	1800 (70.87)	2200 (4850)	-
900 (36)	1500 (59.06)	-	876-902 (34.5-35.5)		-	1000 (39.37)	1300 (51.18)	-	750 (29.53)	1875 (73.82)	2600 (5732)	-
1000 (40)	1500 (59.06)	-	978-1000 (38.5-39.4)		-	1200 (47.24)	1400 (55.12)	-	800 (31.5)	1930 (75.98)	3000 (6614)	-

Dimensions are in mm (inch); weight in kg (lbs)

The given values are for pressure level ANSI 600, respectively ANSI900 (specified).

Di-1 = inner diameter (tapered, schedule 80)
Di-2 = inner diameter full bore (schedule 40)

[1] Maximum diameter at the flange, depending on tapering.
[2] Approximate dimension.
[3] Approximate values. Weights can vary due to casting tolerances.

An angle of 7° is used for tapering.

13.6 Inner diameter of connecting spool pieces

Connection diameter at tapering of the USM GT400
(= inner diameter for inlet and outlet spool pieces)

Maximum deviation from meter to piping:

+/- 1% acc. MID

For calibrated spool pieces belonging to the measuring instrument, the deviation may be up to +/- 3%. For the full-bore version, generally +5% / -2% are allowed regardless of the use during calibration.

The blue marked inner diameters for every ANSI pressure rating are to be understood as a recommendation if no inner diameter is specified by the customer.

Meter size in DN / Inch	Pressure class	Inner Diameter	Min. ID of spools	Max. ID of spools	Schedule
80	ANSI150	73,7	73	74,4	80
80	ANSI150	77,9	77,2	78,7	40
80	ANSI300	73,7	73	74,4	80
80	ANSI300	77,9	77,2	78,7	40
80	ANSI600	73,7	73	74,4	80
80	ANSI600	77,9	77,2	78,7	40
100	ANSI150RF	97.2	96.2	98.2	80
100	ANSI150RF	102.3	101.3	103.3	40
100	ANSI300RF	97.2	96.2	98.2	80
100	ANSI300RF	102.3	101.3	103.3	40
100	ANSI600RF	97.2	96.2	98.2	80
100	ANSI600RF	102.3	101.3	103.3	40
100	ANSI600RTJ	97.2	96.2	98.2	80
100	ANSI600RTJ	102.3	101.3	103.3	40
150	ANSI150RF	146.4	144.9	147.9	80
150	ANSI150RF	154.1	152.6	155.6	40

Meter size in DN / Inch	Pressure class	Inner Diameter	Min. ID of spools	Max. ID of spools	Schedule
150	ANSI300RF	146.4	144.9	147.9	80
150	ANSI300RF	154.1	152.6	155.6	40
150	ANSI600RF	146.4	144.9	147.9	80
150	ANSI600RF	154.1	152.6	155.6	40
150	ANSI600RTJ	146.4	144.9	147.9	80
150	ANSI600RTJ	154.1	152.6	155.6	40
200	ANSI150RF	193.7	191.8	195.6	80
200	ANSI150RF	198.5	196.5	200.5	60
200	ANSI150RF	202.7	200.7	204.7	40
200	ANSI300RF	193.7	191.8	195.6	80
200	ANSI300RF	198.5	196.5	200.5	60
200	ANSI300RF	202.7	200.7	204.7	40
200	ANSI600RF	193.7	191.8	195.6	80
200	ANSI600RF	198.5	196.5	200.5	60
200	ANSI600RF	202.7	200.7	204.7	40
200	ANSI600RTJ	193.7	191.8	195.6	80
200	ANSI600RTJ	198.5	196.5	200.5	60
200	ANSI600RTJ	202.7	200.7	204.7	40
250	ANSI150RF	242.8	240.4	245.2	80
250	ANSI150RF	247.6	245.1	250.1	60
250	ANSI150RF	254.4	251.9	256.9	40
250	ANSI300RF	242.8	240.4	245.2	80
250	ANSI300RF	247.6	245.1	250.1	60
250	ANSI300RF	254.4	251.9	256.9	40
250	ANSI600RF	242.8	240.4	245.2	80
250	ANSI600RF	247.6	245.1	250.1	60
250	ANSI600RF	254.4	251.9	256.9	40
250	ANSI600RTJ	242.8	240.4	245.2	80
250	ANSI600RTJ	247.6	245.1	250.1	60
250	ANSI600RTJ	254.4	251.9	256.9	40
300	ANSI150RF	288.8	285.9	291.7	80
300	ANSI150RF	295.3	292.3	298.3	60
300	ANSI150RF	303.2	300.2	306.2	40
300	ANSI300RF	288.8	285.9	291.7	80
300	ANSI300RF	295.3	292.3	298.3	60
300	ANSI300RF	303.2	300.2	306.2	40
300	ANSI600RF	288.8	285.9	291.7	80
300	ANSI600RF	295.3	292.3	298.3	60
300	ANSI600RF	303.2	300.2	306.2	40
300	ANSI600RTJ	288.8	285.9	291.7	80

Meter size in DN / Inch	Pressure class	Inner Diameter	Min. ID of spools	Max. ID of spools	Schedule
300	ANSI600RTJ	295.3	292.3	298.3	60
300	ANSI600RTJ	303.2	300.2	306.2	40
400	ANSI150RF	363.5	359.9	367.1	80
400	ANSI150RF	373.1	369.4	376.8	60
400	ANSI150RF	381	377.2	384.8	40
400	ANSI300RF	363.5	359.9	367.1	80
400	ANSI300RF	373.1	369.4	376.8	60
400	ANSI300RF	381	377.2	384.8	40
400	ANSI600RF	363.5	359.9	367.1	80
400	ANSI600RF	373.1	369.4	376.8	60
400	ANSI600RF	381	377.2	384.8	40
400	ANSI600RTJ	363.5	359.9	367.1	80
400	ANSI600RTJ	373.1	369.4	376.8	60
400	ANSI600RTJ	381	377.2	384.8	40
500	ANSI150RF	455.6	451.0	460.2	80
500	ANSI150RF	466.8	462.1	471.5	60
500	ANSI150RF	477.8	473.0	482.6	40
500	ANSI300RF	455.6	451.0	460.2	80
500	ANSI300RF	466.8	462.1	471.5	60
500	ANSI300RF	477.8	473.0	482.6	40
500	ANSI600RF	455.6	451.0	460.2	80
500	ANSI600RF	466.8	462.1	471.5	60
500	ANSI600RF	477.8	473.0	482.6	40
500	ANSI600RTJ	455.6	451.0	460.2	80
500	ANSI600RTJ	466.8	462.1	471.5	60
500	ANSI600RTJ	477.8	473.0	482.6	40
600	ANSI300RF	547.7	542.2	553.2	80
600	ANSI300RF	560.4	554.8	566.0	60
600	ANSI300RF	574.6	568.9	580.3	40
600	ANSI600RF	547.7	542.2	553.2	80
600	ANSI600RF	560.4	554.8	566.0	60
600	ANSI600RF	574.6	568.9	580.3	40

13.7 Official seal diagram

In this chapter you will receive information at which location the official seals are attached to the device.

The device must not be used for a calibrated operation if the official seal is broken.

13.7.1 Type plate

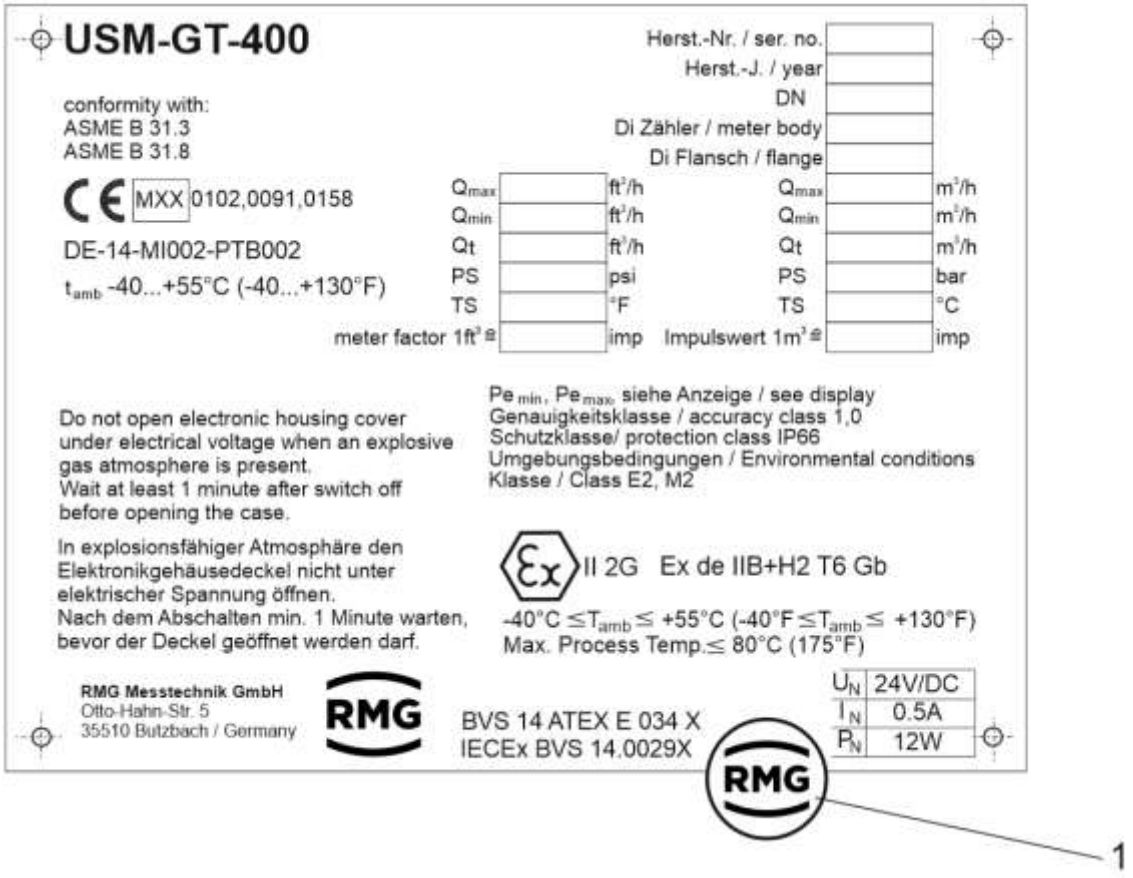

1 Seal

Fig. 13.7: Position of the official seal on the type plate

13.7.2 Ultrasonic electronics

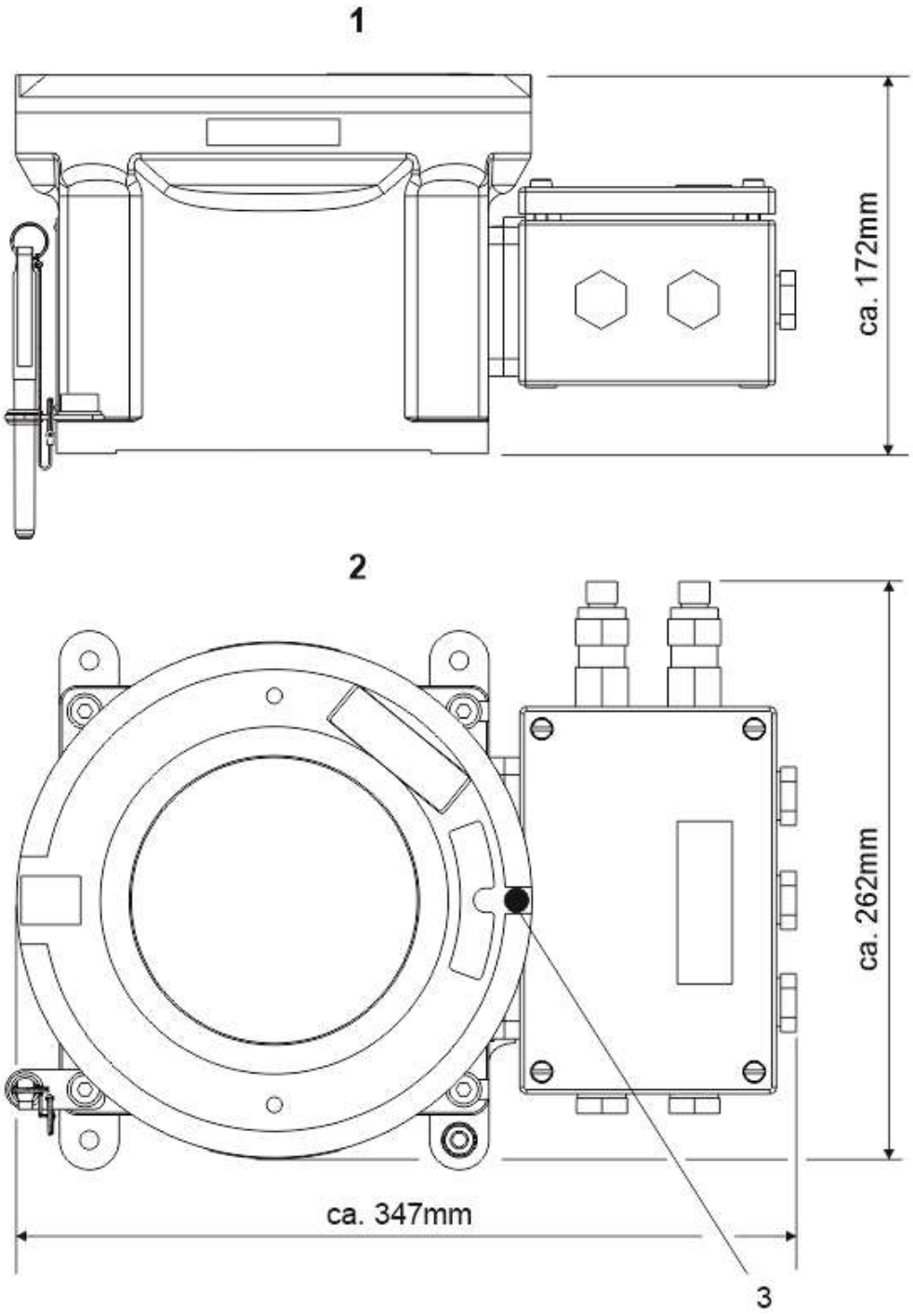

Representation of the device with DN 150 (6“)

1 Side view
2 Top view
3 Seal

Fig. 13.8: Official seal diagram according to AEX / IECEx

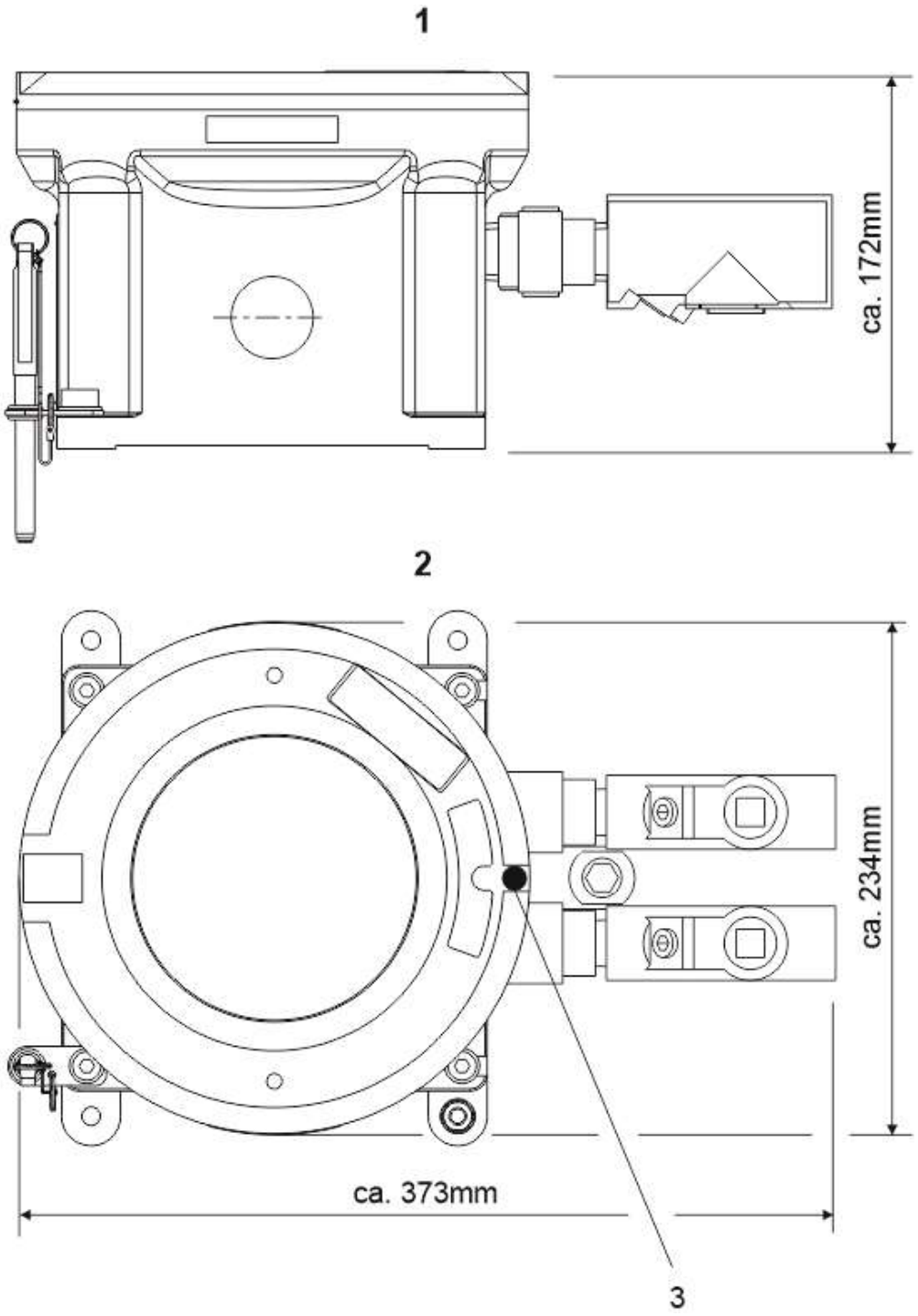

Representation of the device with DN 150 (6“)

1 Side view
2 Top view
3 Seal

Fig. 13.9: Official seal diagram according to NEC

13.7.3 Ultrasonic gas meter

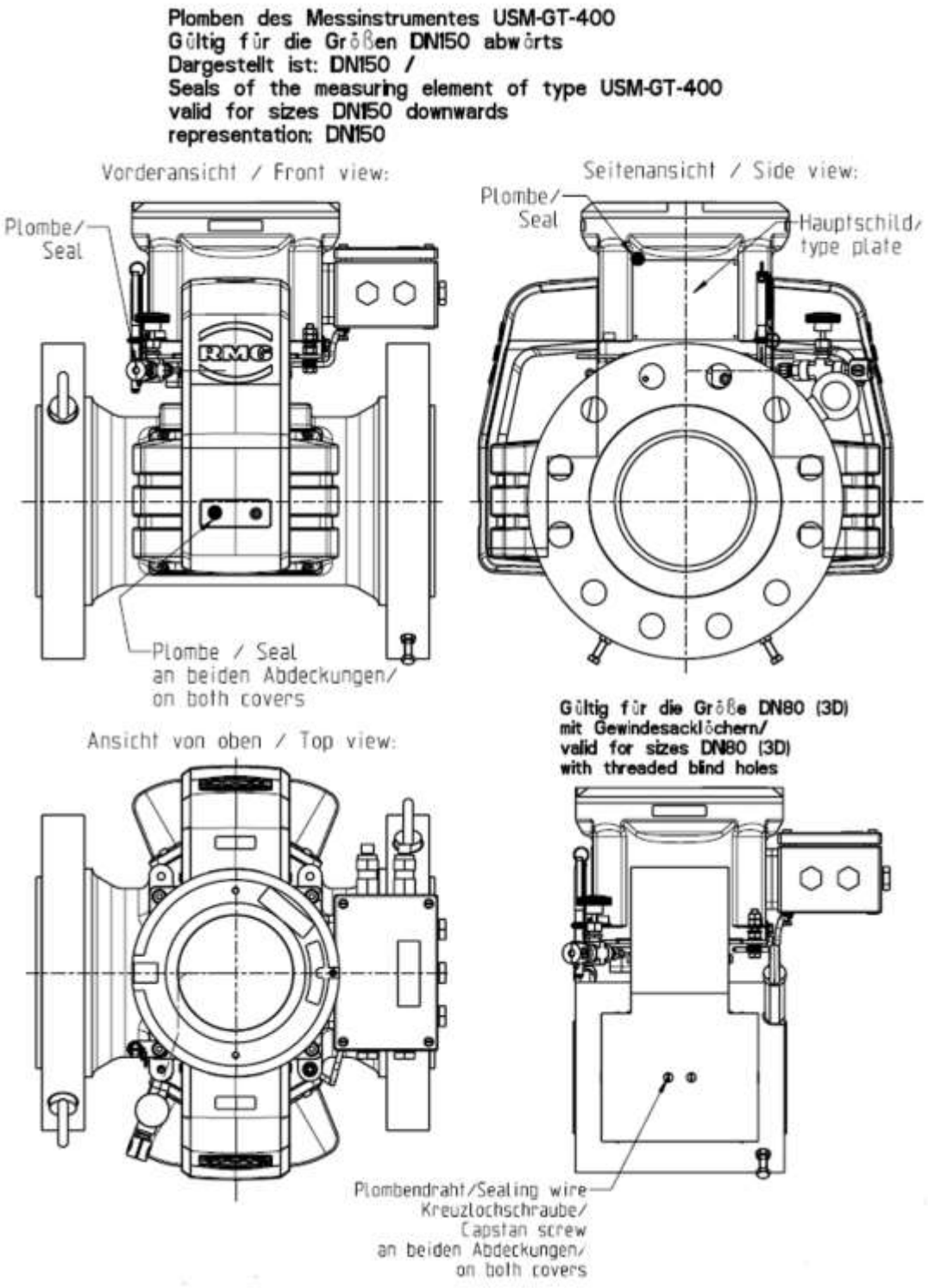

Fig. 13.10: Devices DN 80 (3”), DN 100 (4“) and DN 150 (6“)

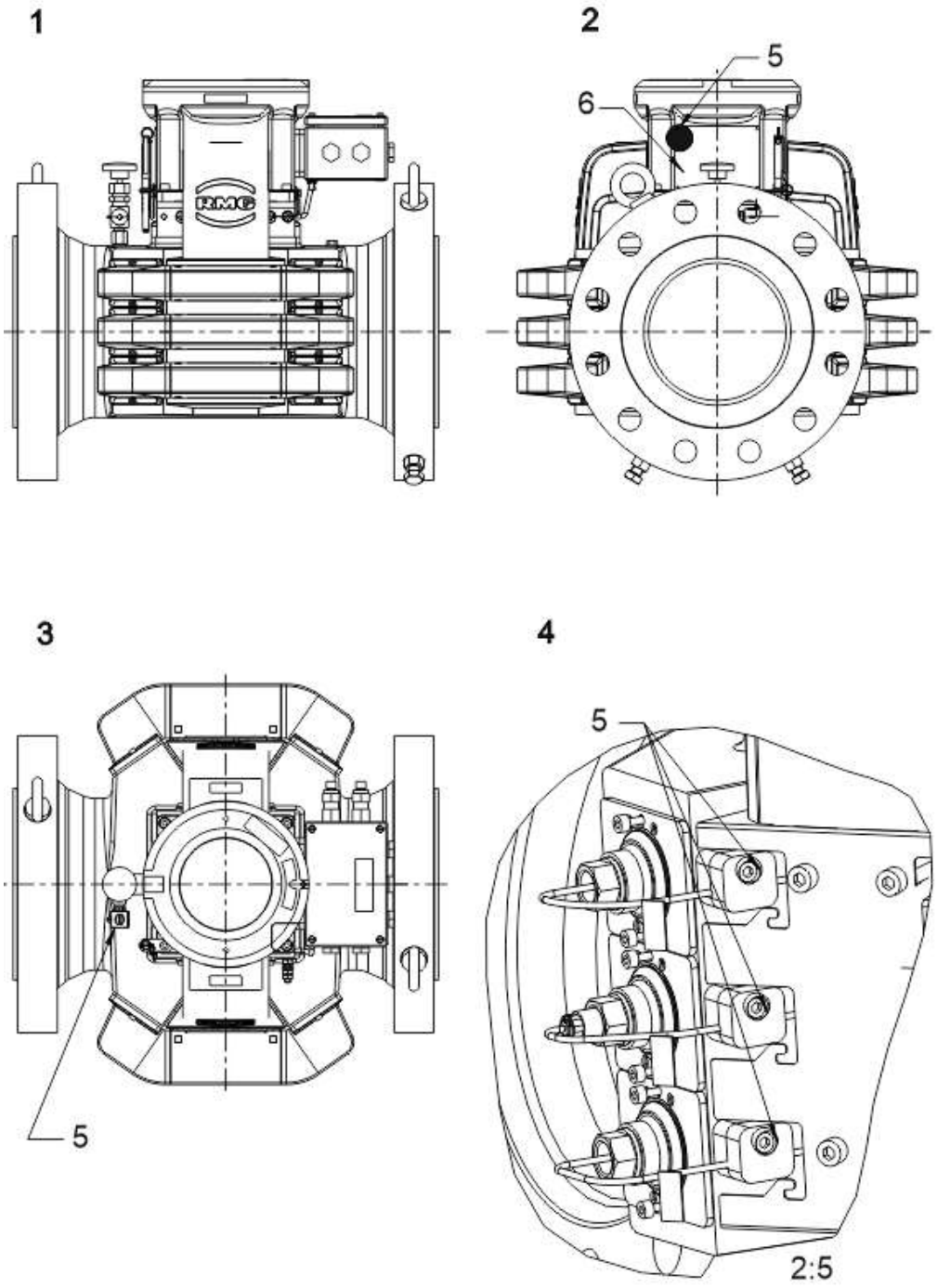

1	Front view	2	Side view
3	Top view	4	View without cover
5	Seal	6	Type plate

Fig. 13.11: Devices DN 200 (8 ") and larger

Seals of the measuring element of type USM-GT-400
Valid for sizes DN 200 upwards
Representation: DN 200

13.8 Transducer types

Danger

Mortal danger from incorrect replacement of the transducer
If transducers of a device under pressure are not changed correctly, this may cause an explosion. Escaping gas mixtures may lead to intoxication.

- Change the transducer only if you have obtained a training from RMG for this activity.
- Observe the separate service instruction for changing the transducer.

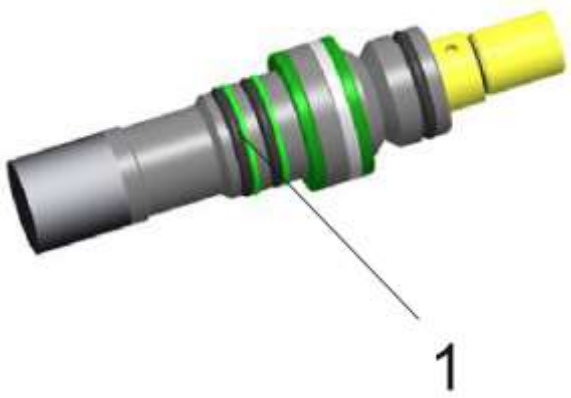

1 TNG 10-CP / -CHP

Fig. 13.12: Trancducer type TNG 10-CP / -CHP

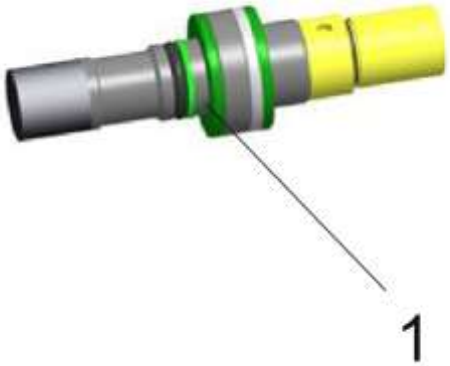

1 TNG 20-SP / -SHP

Fig. 13.13: Trancducer type TNG 20-SP / -SHP

Transducer type	Operating frequency (kHz)	Operating pressure range bar (psi)	Ambient temperature °C (°F)	Gas temperature °C (°F)
TNG 10-CP	120	1–150 (14,5 to 2175.57)	-40 to +55 °C (55 to 131 °F)	to +80 °C (176 °F)
TNG 10-CHP	120	1–300 (14,5 to 4351.13)	-40 to +55 °C (55 to 131 °F)	to +80 °C (176 °F)
TNG 20-SP	200	1–150 (14,5 to 2175.57)	-40 to +55 °C (55 to 131 °F)	to +80 °C (176 °F)
TNG 20-SHP	200	1–300 (14,5 to 4351.13)	-40 to +55 °C (55 to 131 °F)	to +80 °C (176 °F)

14 Spare parts and accessories

Order number	Description
Electronics	
98800-14400	USE 09, complete electronics
98800-13352	USE 09, display circuit board
98800-13512	USE 09, Options card 1 (RS485 and pulse outputs)
98800-13762	USE 09, Options card 2 (P&T inputs)
98800-13020	USE 09, Multiplexer (4 channels)
00.66.197.00	Magnetic pin, complete with holder
External elements	
00.65.142.00	Weather protection cover for electronics housing
00.64.923.00	Complete grill element DN 100 (4”)
00.64.855.00	Complete grill element DN 150 (6”)
00.64.811.00	Transducer cover for DN 80 (3”) to DN 150 (6”)
00.64.798.00	Grill element DN 200 (8”)
00.64.860.00	Grill element DN 250 (10”)
00.64.862.00	Grill element DN 300 (12”)
00.64.864.00	Grill element DN 400 (16”)
00.64.866.00	Grill element DN 500 (20”)
00.64.868.00	Grill element (middle level) DN 600 (24”)
00.64.926.00	Grill element (outer levels) DN 600 (24”)
87.06.050.00	Cable bushing M20x1.5 (Ø 3-9)
87.06.051.00	Cable bushing M20x1.5 (Ø 6-12)
84.08.023.00	Shut-off valve NV2F-4N-R-K 2x1/4NPT inn.H.

Pipe bundles

00.64.767.01	Pipe bundle for DN 100 (4”)
00.64.767.02	Pipe bundle for DN 150 (6”)
00.64.767.03	Pipe bundle for DN 200 (8”)
00.64.767.04	Pipe bundle for DN 250 (10”)
00.64.767.05	Pipe bundle for DN 300 (12”)
00.64.767.06	Pipe bundle for DN 400 (16”)
00.64.767.07	Pipe bundle for DN 500 (20”)
00.64.767.08	Pipe bundle for DN 600 (24”)

Transducers

00.64.758.00	USM-transducer type TNG 20-SP (3”-6”), 200 kHz, up to 150 bar(a)
00.65.000.00	USM-transducer type TNG20-SHP (3”-6”), 200 kHz, up to 300 bar(a)
00.64.757.00	USM-transducer type TNG 10-CP (8”-40”), 120 kHz, up to 150 bar(a)
00.64.839.00	USM-transducer type TNG10-CHP (8”-40”), 120 kHz, up to 300 bar(a)

Tools for transducer replacement

00.64.669.00	Special tool for transducer replacement DN200 (8”)
00.65.011.00	Special tool for transducer replacement DN250 (10”)
00.65.012.00	Special tool for transducer replacement DN300 (12”)
00.65.013.00	Special tool for transducer replacement DN400 (16”)
00.65.014.00	Special tool for transducer replacement DN500 (20”)
00.65.015.00	Special tool for transducer replacement DN600 (24”)
38.00.014.00	Special tool pair d=7x10 for USE-09
00.61.128.00	Special tool for transducer replacement under pressure (from DN 200)

Interface converter

30.00.212.00	RS 485 to USB converter for top hat rail (I-7561U-G CR)
35.00.023.00	RS 485 to Ethernet converter (FL Comserver)

15 Lists of parameters and measured values

The following tables show the parameters that can be shown and edited using the RMGView^{USM} software or via the display with control panel.

With different versions of the device software, individual parameters may have different coordinates.

The abbreviations in the Type and Protection (Prot.) columns have the following meanings:

Type	
F	Float
M	Menu
I	Integer
U	Unixtime
L	Long Int.
T	Text
D	Double
C	Code

Protection	
R	Reading Value
S	Official Key
F	free programmable
C	Codeword
CS	Code and Official Key

(d) to the right of a menu option means “default value”.

Pressure

Coord.	Value	Reg.	No.	Type	Prot.	Unit	Description		
A-01	Pressure	6252	2	F	R	→ Units: Pressure a	Shows the measured pressure		
A-03	Current Input	6254	2	F	R	mA	Shows the input value in mA		
A-05	p min value	1392	2	F	S	→ Units: Pressure a	Measuring pressure min. value		
A-06	p max value	1394	2	F	S	→ Units: Pressure a	Measuring pressure max. value		
A-09	p set value	1396	2	F	S	→ Units: Pressure a	Measuring pressure default value		
A-11	p at base cond.	1398	2	F	S	→ Units: Pressure a	base pressure		
A-12	curr. inp. gradient	1400	2	F	S		Gradient (correction of the mA value)		
A-13	curr. inp. offset	1402	2	F	S		Offset (correction of the mA value)		
A-14	p err. min	1404	2	F	S	→ Units: Pressure a	Lower error limit of measuring pressure		
A-15	p err. max	1406	2	F	S	→ Units: Pressure a	Upper error limit of measuring pressure		
A-17	p mode	4078	1	M	S		Operating mode of measuring pressure		
							0x0000	OFF	(d)
							0x0001	SET VALUE	
							0x0002	4-20mA	
							0x0003	4-20mA_ERR	

Temperature

Coord.	Value	Reg.	No.	Type	Prot.	Unit	Description		
B-01	temperature	6256	2	F	R	→ Units: Temp.	PT100-input		
B-03	PT100 resistance	6258	2	F	R	Ohm	PT100-input		
B-09	T set value	1408	2	F	S	→ Units: Temp.	PT100-input		
B-11	T at base cond.	1410	2	F	S	→ Units: Temp.	base temperature		
B-12	T gradient	1412	2	F	S		Gradient (correction of the Ohm value)		
B-13	T offset	1414	2	F	S		Offset (correction of the Ohm value)		
B-14	T err. min	1416	2	F	S	→ Units: Temp.	Lower error limit of measuring temperature		
B-15	T err. max	1418	2	F	S	→ Units: Temp.	Upper error limit of measuring temperature		
B-17	T mode	4079	1	M	S		Operating mode of measuring temperature		
							0x0000	OFF	(d)
							0x0001	SET VALUE	
							0x0002	PT100	
							0x0003	PT100_ERR	

USE09-C Meas. Val.

Coord.	Value	Reg.	No.	Type	Prot.	Unit	Description
C-01	vw	6220	2	F	R	→ velocity unit	weighted gas velocity
C-02	vwc	6222	2	F	R	→ velocity unit	corrected weighted gas velocity
C-03	Qm	6224	2	F	R	→ flow unit	Intermediate result for Qm (with preceding sign)
C-04	Qmb	6238	2	F	R	→ flow unit	Intermediate result for Qmb (with preceding sign)
C-05	Qmc	6226	2	F	R	→ flow unit	Intermediate result for Qmc (with preceding sign)
C-06	performance	6268	1	I	R	%	Performance

USE09-C Qm

Coord.	Value	Reg.	No.	Type	Prot.	Unit	Description		
D-01	vol. Flow rate Qm	730	10	T	R	→ flow unit	Volumetric flow rate Qm after all corrections (as amount) with upstream/downstream identification		
D-02	vol. flow rate Qm	6230	2	F	R	→ flow unit	Volumetric flow rate Qm after all corrections (Qm lower limit will be observed)		
D-03	Qm damped	6264	2	F	R	→ flow unit	Volumetric flow rate Qm damped (Qm lower limit will be observed)		
D-04	Qm min.	1320	2	F	S	→ flow unit	Qm min. limit		
D-05	Qm max.	1322	2	F	S	→ flow unit	Qm max. limit		
D-06	vw factor d1	1324	2	F	S	[1]	Constant Kv direction 1		
D-07	vw factor d2	1436	2	F	S	[1]	Constant Kv direction 2		
D-08	vw lower limit	1326	2	F	S	→ Calib. units: v	vw lower limit (creeping quantity before apply. polynomial)		
D-09	Qm lower limit	1328	2	F	S	→ flow unit	Qm lower limit (creeping quantity)		
D-10	Qm-min time	2120	1	I	S	s	Time below Qm min		
D-15	Qm damping	1446	2	F	C		Damping for Qmc-D (0.0=off, 1.0=max)		
D-16	pipe diameter	1334	2	F	S	→ Calib. units: Length	Pipe diameter		
D-17	geometry correcting	2258	1	M	S		Correction of the effects of press. and temp.		
							0x0000	OFF	(d)
							0x0001	ON	
D-18	temp. coefficient	1450	2	F	S		Temperature coefficient		
D-19	pressure coeff.	1452	2	F	S		Pressure coefficient		
D-20	Qm-max value 1	1330	2	F	C	→ flow unit	Qm max. value of direction 1		
D-21	Qm-max time 1	2580	2	U	C		Time of Qm max. value 1		
D-22	Qm-max value 2	1332	2	F	C	→ flow unit	Qm max. value of direction 2		
D-23	Qm-max time 2	2582	2	U	C		Time of Qm max. value 2		
D-24	Qt	9084	2	F	R		Transition flow Qt		

Parameters

Coord.	Value	Reg.	No.	Type	Prot.	Unit	Description		
E-01	USE09 working mode	2090	1	M	S		USE09 operating mode		
							0x0000	IGM	(d)
							0x0001	USE09C	
							0x0002	SIMU	
							0x0003	SIMU_K	
							0x0004	SIMU_N	
							0x0005	SIMU_EW	
E-02	path select	690	10	T	S		Select activated paths (path 1.1, path 1.2 … path 4.2)		
E-03	max. path RV	2121	1	I	S		Maximum number of used replacement values		
E-04	fault time	2122	1	I	S	s	Time limit for IGM timeout		
E-05	error per cent	2123	1	I	S	%	A measurement quality below this level will cause a path error		
E-09	moving average cnt	2125	1	I	C		Number of measured values for the moving average, V, SoS		
E-15	SoS mode	2240	1	M	C		Speed of Sound mode		
							0x0000	STANDARD	(d)
							0x0001	EXTENDED	
							0x0002	CALIBRATION	
							0x0003	STATISTIC OFF	
E-16	delta SoS mode	2091	1	M	C		Delta SoS observing ON / OFF		
							0x0000	OFF	
							0x0001	ON	(d)
E-17	delta SoS limit	1344	2	F	C	%	Limit for Delta SoS		
E-18	std. SoS corr-factor	1370	2	F	S	[1]	Standard SoS correction-factor		
E-19	adv. SoS corr-factor	9068	2	F	S	[1]	Advanced SoS correction-factor		
E-20	std. SoS v factor	1372	2	F	S	[1]	Standard SoS v correction-factor		
E-21	adv. SoS v factor	9070	2	F	S	[1]	Advanced SoS v correction-factor		
E-22	delta AGC limits	1438	2	F	C	dB	Max. deviation between path-AGC and AGC-mean		
E-23	Tw correct	2281	1	M	S		Correct TWs		
							0x0000	OFF	(d)
							0x0001	SET	
E-24	Tw damping	1518	2	F	C		Damping for TW adjustment		

USE09-C polynom-B

Coord.	Value	Reg.	No.	Type	Prot.	Unit	Description

Flow correction

Coord.	Value	Reg.	No.	Type	Prot.	Unit	Description		
G-01	error curve lin.	2093	1	M	S		Error curve linearization mode		
							0x0000	OFF	(d)
							0x0001	POLYNOMIAL	
							0x0002	piecewise lin.	
G-02	const m2 d.1	1276	2	F	S	[1]	Error polynomial for direction 1		
G-03	const m1 d.1	1278	2	F	S	[1]	Error polynomial for direction 1		
G-04	const 0 d.1	1280	2	F	S	[1]	Error polynomial for direction 1		
G-05	const 1 d.1	1282	2	F	S	[1]	Error polynomial for direction 1		
G-06	const 2 d.1	1284	2	F	S	[1]	Error polynomial for direction 1		
G-10	const m2 d.2	1306	2	F	S	[1]	Error polynomial for direction 2		
G-11	const m1 d.2	1308	2	F	S	[1]	Error polynomial for direction 2		
G-12	const 0 d.2	1310	2	F	S	[1]	Error polynomial for direction 2		
G-13	const 1 d.2	1312	2	F	S	[1]	Error polynomial for direction 2		
G-14	const 2 d.2	1314	2	F	S	[1]	Error polynomial for direction 2		
G-20	dir. 1: flowrate 1	1600	2	F	S	→ Calib. units: Q	Linear interpolation direction 1: flow rate 1		
G-21	dir. 1: error 1	1602	2	F	S	%	Linear interpolation direction 1: error 1		
G-22	dir. 1: flowrate 2	1604	2	F	S	→ Calib. units: Q	Linear interpolation direction 1: flow rate 2		
G-23	dir. 1: error 2	1606	2	F	S	%	Linear interpolation direction 1: error 2		
G-24	dir. 1: flowrate 3	1608	2	F	S	→ Calib. units: Q	Linear interpolation direction 1: flow rate 3		
G-25	dir. 1: error 3	1610	2	F	S	%	Linear interpolation direction 1: error 3		
G-26	dir. 1: flowrate 4	1612	2	F	S	→ Calib. units: Q	Linear interpolation direction 1: flow rate 4		
G-27	dir. 1: error 4	1614	2	F	S	%	Linear interpolation direction 1: error 4		
G-28	dir. 1: flowrate 5	1616	2	F	S	→ Calib. units: Q	Linear interpolation direction 1: flow rate 5		
G-29	dir. 1: error 5	1618	2	F	S	%	Linear interpolation direction 1: error 5		
G-30	dir. 1: flowrate 6	1620	2	F	S	→ Calib. units: Q	Linear interpolation direction 1: flow rate 6		
G-31	dir. 1: error 6	1622	2	F	S	%	Linear interpolation direction 1: error 6		
G-32	dir. 1: flowrate 7	1624	2	F	S	→ Calib. units: Q	Linear interpolation direction 1: flow rate 7		
G-33	dir. 1: error 7	1626	2	F	S	%	Linear interpolation direction 1: error 7		
G-34	dir. 1: flowrate 8	1628	2	F	S	→ Calib. units: Q	Linear interpolation direction 1: flow rate 8		
G-35	dir. 1: error 8	1630	2	F	S	%	Linear interpolation direction 1: error 8		
G-36	dir. 1: flowrate 9	1632	2	F	S	→ Calib. units: Q	Linear interpolation direction 1: flow rate 9		
G-37	dir. 1: error 9	1634	2	F	S	%	Linear interpolation direction 1: error 9		
G-38	dir. 1: flowrate 10	1636	2	F	S	→ Calib. units: Q	Linear interpolation direction 1: flow rate 10		
G-39	dir. 1: error 10	1638	2	F	S	%	Linear interpolation direction 1: error 10		

G-40	dir. 1: flowrate 11	1640	2	F	S	→ Calib. units: Q	Linear interpolation direction 1: flow rate 11
G-41	dir. 1: error 11	1642	2	F	S	%	Linear interpolation direction 1: error 11
G-42	dir. 1: flowrate 12	1644	2	F	S	→ Calib. units: Q	Linear interpolation direction 1: flow rate 12
G-43	dir. 1: error 12	1648	2	F	S	%	Linear interpolation direction 1: error 12
G-44	dir. 2: flowrate 1	1650	2	F	S	→ Calib. units: Q	Linear interpolation direction 2: flow rate 1
G-45	dir. 2: error 1	1652	2	F	S	%	Linear interpolation direction 2: error 1
G-46	dir. 2: flowrate 2	1654	2	F	S	→ Calib. units: Q	Linear interpolation direction 2: flow rate 2
G-47	dir. 2: error 2	1656	2	F	S	%	Linear interpolation direction 2: error 2
G-48	dir. 2: flowrate 3	1658	2	F	S	→ Calib. units: Q	Linear interpolation direction 2: flow rate 3
G-49	dir. 2: error 3	1660	2	F	S	%	Linear interpolation direction 2: error 3
G-50	dir. 2: flowrate 4	1662	2	F	S	→ Calib. units: Q	Linear interpolation direction 2: flow rate 4
G-51	dir. 2: error 4	1664	2	F	S	%	Linear interpolation direction 2: error 4
G-52	dir. 2: flowrate 5	1666	2	F	S	→ Calib. units: Q	Linear interpolation direction 2: flow rate 5
G-53	dir. 2: error 5	1668	2	F	S	%	Linear interpolation direction 2: error 5
G-54	dir. 2: flowrate 6	1670	2	F	S	→ Calib. units: Q	Linear interpolation direction 2: flow rate 6
G-55	dir. 2: error 6	1672	2	F	S	%	Linear interpolation direction 2: error 6
G-56	dir. 2: flowrate 7	1674	2	F	S	→ Calib. units: Q	Linear interpolation direction 2: flow rate 7
G-57	dir. 2: error 7	1676	2	F	S	%	Linear interpolation direction 2: error 7
G-58	dir. 2: flowrate 8	1678	2	F	S	→ Calib. units: Q	Linear interpolation direction 2: flow rate 8
G-59	dir. 2: error 8	1680	2	F	S	%	Linear interpolation direction 2: error 8
G-60	dir. 2: flowrate 9	1682	2	F	S	→ Calib. units: Q	Linear interpolation direction 2: flow rate 9
G-61	dir. 2: error 9	1684	2	F	S	%	Linear interpolation direction 2: error 9
G-62	dir. 2: flowrate 10	1686	2	F	S	→ Calib. units: Q	Linear interpolation direction 2: flow rate 10
G-63	dir. 2: error 10	1688	2	F	S	%	Linear interpolation direction 2: error 10
G-64	dir. 2: flowrate 11	1690	2	F	S	→ Calib. units: Q	Linear interpolation direction 2: flow rate 11
G-65	dir. 2: error 11	1692	2	F	S	%	Linear interpolation direction 2: error 11
G-66	dir. 2: flowrate 12	1694	2	F	S	→ Calib. units: Q	Linear interpolation direction 2: flow rate 12
G-67	dir. 2: error 12	1698	2	F	S	%	Linear interpolation direction 2: error 12

Freq.,Pulse Outputs

Coord.	Value	Reg.	No.	Type	Prot.	Unit	Description		
H-01	fo base value	6248	2	F	R	→ flow unit	Measured value of the frequency output		
H-02	frequency value	6250	2	F	R	Hz	Frequency value of the frequency output (in Hz)		
H-03	fo corr. factor	1386	2	F	S		Correction factor of the frequency output		
H-04	corr. frequency	6266	2	F	R	Hz	Correction of the frequency value of the frequency output (in Hz)		
H-05	fo base max.	1388	2	F	S	→ Calib. units: Q	Upper range value of the frequency output (physical value)		
H-06	fo freq. max.	1444	2	F	S	Hz	Maximum value of the frequency output (in Hz)		
H-07	pulse value	6262	2	F	R	→ pulse unit	Indication of the calculated pulse value of the frequency output		
H-08	fo set value	1390	2	F	S	Hz	Calibration frequency		
H-09	fo select	2161	1	M	C		Selection of the measured value for the frequency output		
							0x0000	QMC	(d)
							0x0001	QMC-D	
H-10	fo mode	2162	1	M	S		Operating mode of the frequency output		
							0x0000	OFF	
							0x0001	SET VALUE	
							0x0002	ON	(d)
							0x0003	TEST	
H-11	fo2 error mode	2163	1	M	S		Frequency-2 mode if a fault occurs		
							0x0000	F2 STOP	(d)
							0x0001	F2 ACTIVE	
							0x0002	CRYSTAL TEST	
H-12	ferr waveform gen.	6260	2	F	R	Hz	Frequency delta		
H-15	IO-1 mode	2165	1	M	C		Mode for IO-1		
							0x0000	OFF	
							0x0001	DIRECTION	(d)
							0x0002	DIRECTION INV.	
							0x0003	INPUT	
							0x0004	TEST	
							0x0005	WARN-INPUT HIGH	
							0x0006	WARN-INPUT LOW	
H-16	IO-2 mode 2166		1	M	C		Mode for IO-2		
							0x0000	OFF	
							0x0001	DIRECTION	(d)

							0x0002	DIRECTION INV.	
							0x0003	INPUT	
							0x0004	TEST	
							0x0005	CPU	
H-17	mode ext. warning	2186	1	M	C		Mode in the case of external warning		
							0x0000	OFF	(d)
							0x0001	LOW_POWER	
H-20	Test Alarm a. Warn 4081		1	M	C		Tests the warning and alarm contacts		
							0x0000	OFF	(d)
							0x0001	TEST	

Current Output

Coord.	Value	Reg.	No.	Type	Prot.	Unit	Description		
I-01	c-out physical val.	6244	2	F	R		Current output, physical value		
I-02	c-out value	6246	2	F	R	mA	Current output in mA		
I-03	c-out min.	1374	2	F	C		Current output, physical minimum value		
I-04	c-out max.	1376	2	F	C		Current output, physical maximum value		
I-05	c-out set value	1378	2	F	C	mA	Current output, set value		
I-06	c-out select	2158	1	I	C		Current output, selection of the measured value (Modbus reg.)		
I-07	c-out mode	2159	1	M	C		Current output, operating mode		
							0x0000	OFF	(d)
							0x0001	SET VALUE	
							0x0002	0-20mA	
							0x0003	4-20mA	
I-08	c-out err mode	2160	1	M	C		Current output, operating mode if a fault occurs		
							0x0000	OFF	(d)
							0x0001	MIN	
							0x0002	MAX	
I-09	c-out damping	1380	2	F	C		Current output, damping (0.0=OFF, 1.0=max)		
I-10	c-out gradient	1382	2	F	S		Current output, gradient		
I-11	c-out offset	1384	2	F	S		Current output, offset		

Serial Ports

Coord.	Value	Reg.	No.	Type	Prot.	Unit	Description
J-12	DZU-0 address	2283	1	I	F		Serial interface -1 DZU slave ID (ASCII: 00-99)
J-13	serial-0 status	760	10	T	R		Serial interface -1 status

J-14	serial-1 mode	2107	1	M	F		Serial interface -1 mode		
							0x0000	OFF	(d)
							0x0001	IGM	
							0x0002	USE09	
							0x0003	DZU	
							0x0004	DZU-DIAG	
							0x0005	DZU X-FRAME	
							0x0006	VO	
							0x0007	DZU-SLAVE	
							0x0008	Modbus	
J-15	serial-1 baud rate	2108	1	M	F	baud	Serial interface -1 baud rate		
							0x0000	2400	
							0x0001	4800	
							0x0002	9600	
							0x0003	19200	(d)
							0x0004	38400	
							0x0005	57600	
J-16	serial-1 bits	2109	1	M	F		Serial interface -1 number of bits		
							0x0000	7	
							0x0001	8	(d)
J-17	serial-1 parity	2110	1	M	F		Serial interface -1 parity		
							0x0000	NONE	(d)
							0x0001	EVEN	
							0x0002	ODD	
J-23	DZU-1 address	2284	1	I	F		Serial interface -1 DZU slave ID (ASCII: 00-99)		
J-24	serial-1 status	770	10	T	R		Serial interface -1 status		
J-25	opt. ser2 mode	2112	1	M	F		Optional serial interface -2 mode		
							0x0000	OFF	
							0x0001	Modbus	(d)
							0x0002	IGM	
							0x0003	USE09	
							0x0004	DZU-SLAVE	
							0x0005	RMGBus	
							0x0006	Modbus master	
J-26	opt. ser2 baud rate	2113	1	M	F	baud	Optional serial interface -2 baud rate		
							0x0000	2400	
							0x0001	4800	
							0x0002	9600	
							0x0003	19200	
							0x0004	38400	(d)

							0x0005	57600	
J-27	opt. ser2 bits	2114	1	M	F		Optional serial interface -2 number of bits		
							0x0000	7	
							0x0001	8	(d)
J-28	opt. ser2 parity	2115	1	M	F		Optional serial interface -2 parity		
							0x0000	NONE	(d)
							0x0001	EVEN	
							0x0002	ODD	
J-29	Modbus-2 proto-col	2178	1	M	F		Optional serial interface -2 Modbus op-erating mode (Off, Ascii or RTU)		
							0x0000	OFF	
							0x0001	RTU	(d)
							0x0002	ASCII	
J-30	Modbus-2 hw-mode	2179	1	M	F		Optional serial interface -2 Modbus hardware (RS232 or RS485)		
							0x0000	RS232	
							0x0001	RS485	(d)
J-31	Modbus-2 ad-dress	2180	1	I	F		Optional serial interface -2 Modbus ad-dress (ID)		
J-32	Modbus-2 reg.off-set	2181	1	I	F		Optional serial interface -2 Modbus reg-ister offset		
J-33	Modbus-2 gap time	2182	1	I	F		Optional serial interface -2 Modbus turn-off time		
J-34	Long Byte Order	2251	1	M	F		Ser-2 Modbus byte order with long: (1,0)(3,2) or (3,2)(1,0)		
							0x0000	NORMAL	
							0x0001	SWAPPED	(d)
J-35	Float Byte Order	2252	1	M	F		Ser-2 Modbus byte order with float: (1,0)(3,2) or (3,2)(1,0)		
							0x0000	NORMAL	
							0x0001	SWAPPED	(d)
J-36	Double Byte Or-der	2253	1	M	F		Ser-2 Modbus byte order with double: (1,0)(3,2)(5,4)(7,6) or (7,6)(5,4)(3,2)(1,0)		
							0x0000	NORMAL	(d)
							0x0001	SWAPPED	
J-37	DZU-2 address	2285	1	I	F		Serial interface -2 DZU slave ID (ASCII: 00-99)		
J-38	serial-2 status	780	10	T	R		Optional serial interface -2 status		
J-39	DZU Interval	2111	1	I	S	tics	Optional serial interface -2 DZU-interval		
J-40	DZU Checksum Preset	2255	1	M	F		Serial interface -1, initial DZU checksum value		
							0x0000	0x00	(d)
							0x0001	0x7F	

DSP,FPGA values

Coord.	Value	Reg.	No.	Type	Prot.	Unit	Description
K-20	DSP status	4004	1	I	R	hex	DSP status (bit encoded)
K-21	DSP error	4003	1	I	R	hex	DSP error (bit encoded)
K-22	DSP bytes received	7034	1	I	R		Counts the receive telegrams from DSP
K-23	FPGA status	4006	1	I	R	hex	FPGA status (bit encoded)
K-24	FPGA error	4005	1	I	R	hex	FPGA error (bit encoded)

Path1 Meas. Values

Coord.	Value	Reg.	No.	Type	Prot.	Unit	Description
L-01	p1.1 time of flight	6100	2	F	R	us	Path 1.1 time of flight
L-02	p1.2 time of flight	6120	2	F	R	us	Path 1.2 time of flight
L-03	path-1 delta-t	6140	2	F	R	us	Path 1 time difference
L-04	p1 delta-t corr.	6540	2	F	R	us	Path 1 corrected time difference
L-06	Valid samples G1	7000	1	I	R	%	Path 1 valid measuring values in %
L-07	path-1 velocity	6000	2	F	R	→ velocity unit	Path 1 path velocity
L-08	velocity vc1	6200	2	F	R	→ velocity unit	Path 1 corrected path velocity vc
L-09	SoS1	6020	2	F	R	→ velocity unit	Path 1 Speed of Sound
L-10	path-1 delta SoS	6080	2	F	R	%	Path 1 Path-SoS / Mean-SoS
L-12	path-1 fault	4030	1	I	R	hex	Path 1 path error
L-13	path-1 status	4040	1	I	R	hex	Path 1 path status
L-14	p1.1 Amplitude	7010	1	I	R	%	Path 1.1 amplitude in per cent
L-15	p1.2 Amplitude	7020	1	I	R	%	Path 1.2 amplitude in per cent
L-16	p1.1 AGC-level	6040	2	F	R	dB	Path 1.1 Automated Gain Control
L-17	p1.2 AGC-level	6060	2	F	R	dB	Path 1.2 Automated Gain Control
L-18	p1.1 snr	6640	2	F	R	dB	Path 1.1 signal-to-noise ratio
L-19	p1.2 snr	6660	2	F	R	dB	Path 1.2 signal-to-noise ratio
L-20	path-1 fault (X)	2270	1	I	R	hex	Path 1 path error (3X-measurement)
L-21	p1.1 AGC-level (X)	6680	2	F	R	dB	Path 1.1 Automated Gain Control (3X-measurement)
L-22	p1.2 AGC-level (X)	6700	2	F	R	dB	Path 1.2 Automated Gain Control (3X-measurement)
L-23	p1.1 snr (X)	6720	2	F	R	dB	Path 1.1 signal-to-noise ratio (3X-measurement)
L-24	p1.2 snr (X)	6740	2	F	R	dB	Path 1.2 signal-to-noise ratio (3X-measurement)
L-26	path-1 turbulence	6776	2	F	R	%	Path 1 turbulence

Path2 Meas. Values

Coord.	Value	Reg.	No.	Type	Prot.	Unit	Description
M-01	p2.1 time of flight	6102	2	F	R	us	Path 2.1 time of flight
M-02	p2.2 time of flight	6122	2	F	R	us	Path 2.2 time of flight
M-03	path-2 delta-t	6142	2	F	R	us	Path 2 time difference
M-04	p2 delta-t corr.	6542	2	F	R	us	Path 2 corrected time difference
M-06	Valid samples G2	7001	1	I	R	%	Path 2 valid measuring values in %
M-07	path-2 velocity	6002	2	F	R	→ velocity unit	Path 2 path velocity
M-08	velocity vc2	6202	2	F	R	→ velocity unit	Path 2 corrected path velocity vc
M-09	SoS2	6022	2	F	R	→ velocity unit	Path 2 Speed of Sound
M-10	path-2 delta SoS	6082	2	F	R	%	Path 2 Path-SoS / Mean-SoS
M-12	path-2 fault	4031	1	I	R	hex	Path 2 path error
M-13	path-2 status	4041	1	I	R	hex	Path 2 path status
M-14	p2.1 Amplitude	7011	1	I	R	%	Path 2.1 amplitude in per cent
M-15	p2.2 Amplitude	7021	1	I	R	%	Path 2.2 amplitude in per cent
M-16	p2.1 AGC-level	6042	2	F	R	dB	Path 2.1 Automated Gain Control
M-17	p2.2 AGC-level	6062	2	F	R	dB	Path 2.2 Automated Gain Control
M-18	p2.1 snr	6642	2	F	R	dB	Path 2.1 signal-to-noise ratio
M-19	p2.2 snr	6662	2	F	R	dB	Path 2.2 signal-to-noise ratio
M-20	path-2 fault (X)	2271	1	I	R	hex	Path 2 path error (3X-measurement)
M-21	p2.1 AGC-level (X)	6682	2	F	R	dB	Path 2.1 Automated Gain Control (3X-measurement)
M-22	p2.2 AGC-level (X)	6702	2	F	R	dB	Path 2.2 Automated Gain Control (3X-measurement)
M-23	p2.1 snr (X)	6722	2	F	R	dB	Path 2.1 signal-to-noise ratio (3X-measurement)
M-24	p2.2 snr (X)	6742	2	F	R	dB	Path 2.2 signal-to-noise ratio (3X-measurement)
M-26	path-2 turbulence	6778	2	F	R	%	Path 2 turbulence

Path3 Meas. Values

Coord.	Value	Reg.	No.	Type	Prot.	Unit	Description
N-01	p3.1 time of flight	6104	2	F	R	us	Path 3.1 time of flight
N-02	p3.2 time of flight	6124	2	F	R	us	Path 3.2 time of flight
N-03	path-3 delta-t	6144	2	F	R	us	Path 3 time difference
N-04	p3 delta-t corr.	6544	2	F	R	us	Path 3 corrected time difference
N-06	Valid samples G3	7002	1	I	R	%	Path 3 valid measuring values in %
N-07	path-3 velocity	6004	2	F	R	→ velocity unit	Path 3 path velocity
N-08	velocity vc3	6204	2	F	R	→ velocity unit	Path 3 corrected path velocity vc
N-09	SoS3	6024	2	F	R	→ velocity unit	Path 3 Speed of Sound
N-10	path-3 delta SoS	6084	2	F	R	%	Path 3 Path-SoS / Mean-SoS
N-12	path-3 fault	4032	1	I	R	hex	Path 3 path error

N-13	path-3 status	4042	1	I	R	hex	Path 3 path status
N-14	p3.1 Amplitude	7012	1	I	R	%	Path 3.1 amplitude in per cent
N-15	p3.2 Amplitude	7022	1	I	R	%	Path 3.2 amplitude in per cent
N-16	p3.1 AGC-level	6044	2	F	R	dB	Path 3.1 Automated Gain Control
N-17	p3.2 AGC-level	6064	2	F	R	dB	Path 3.2 Automated Gain Control
N-18	p3.1 snr	6644	2	F	R	dB	Path 3.1 signal-to-noise ratio
N-19	p3.2 snr	6664	2	F	R	dB	Path 3.2 signal-to-noise ratio
N-20	path-3 fault (X)	2272	1	I	R	hex	Path 3 path error (3X-measurement)
N-21	p3.1 AGC-level (X)	6684	2	F	R	dB	Path 3.1 Automated Gain Control (3X-measurement)
N-22	p3.2 AGC-level (X)	6704	2	F	R	dB	Path 3.2 Automated Gain Control (3X-measurement)
N-23	p3.1 snr (X)	6724	2	F	R	dB	Path 3.1 signal-to-noise ratio (3X-measurement)
N-24	p3.2 snr (X)	6744	2	F	R	dB	Path 3.2 signal-to-noise ratio (3X-measurement)
N-26	path-3 turbulence	6780	2	F	R	%	Path 3 turbulence

Path4 Meas. Values

Coord.	Value	Reg.	No.	Type	Prot.	Unit	Description
O-01	p4.1 time of flight	6106	2	F	R	us	Path 4.1 time of flight
O-02	p4.2 time of flight	6126	2	F	R	us	Path 4.2 time of flight
O-03	path-4 delta-t	6146	2	F	R	us	Path 4 time difference
O-04	p4 delta-t corr.	6546	2	F	R	us	Path 4 corrected time difference
O-06	Valid samples G4	7003	1	I	R	%	Path 4 valid measuring values in %
O-07	path-4 velocity	6006	2	F	R	→ velocity unit	Path 4 path velocity
O-08	velocity vc4	6206	2	F	R	→ velocity unit	Path 4 corrected path velocity vc
O-09	SoS4	6026	2	F	R	→ velocity unit	Path 4 Speed of Sound
O-10	path-4 delta SoS	6086	2	F	R	%	Path 4 Path-SoS / Mean-SoS
O-12	path-4 fault	4033	1	I	R	hex	Path 4 path error
O-13	path-4 status	4043	1	I	R	hex	Path 4 path status
O-14	p4.1 Amplitude	7013	1	I	R	%	Path 4.1 amplitude in per cent
O-15	p4.2 Amplitude	7023	1	I	R	%	Path 4.2 amplitude in per cent
O-16	p4.1 AGC-level	6046	2	F	R	dB	Path 4.1 Automated Gain Control
O-17	p4.2 AGC-level	6066	2	F	R	dB	Path 4.2 Automated Gain Control
O-18	p4.1 snr	6646	2	F	R	dB	Path 4.1 signal-to-noise ratio
O-19	p4.2 snr	6666	2	F	R	dB	Path 4.2 signal-to-noise ratio
O-20	path-4 fault (X)	2273	1	I	R	hex	Path 4 path error (3X-measurement)
O-21	p4.1 AGC-level (X)	6686	2	F	R	dB	Path 4.1 Automated Gain Control (3X-measurement)
O-22	p4.2 AGC-level (X)	6706	2	F	R	dB	Path 4.2 Automated Gain Control (3X-measurement)
O-23	p4.1 snr (X)	6726	2	F	R	dB	Path 4.1 signal-to-noise ratio (3X-measurement)

O-24	p4.2 snr (X)	6746	2	F	R	dB	Path 4.2 signal-to-noise ratio (3X-measurement)
O-26	path-4 turbulence	6782	2	F	R	%	Path 4 turbulence

Path5 Meas. Values

Coord.	Value	Reg.	No.	Type	Prot.	Unit	Description
P-01	p5.1 time of flight	6108	2	F	R	us	Path 5.1 time of flight
P-02	p5.2 time of flight	6128	2	F	R	us	Path 5.2 time of flight
P-03	path-5 delta-t	6148	2	F	R	us	Path 5 time difference
P-04	p5 delta-t corr.	6548	2	F	R	us	Path 5 corrected time difference
P-06	Valid samples G5	7004	1	I	R	%	Path 5 valid measuring values in %
P-07	path-5 velocity	6008	2	F	R	→ velocity unit	Path 5 path velocity
P-08	velocity vc5	6208	2	F	R	→ velocity unit	Path 5 corrected path velocity vc
P-09	SoS5	6028	2	F	R	→ velocity unit	Path 5 Speed of Sound
P-10	path-5 delta SoS	6088	2	F	R	%	Path 5 Path-SoS / Mean-SoS
P-12	path-5 fault	4034	1	I	R	hex	Path 5 path error
P-13	path-5 status	4044	1	I	R	hex	Path 5 path status
P-14	p5.1 Amplitude	7014	1	I	R	%	Path 5.1 amplitude in per cent
P-15	p5.2 Amplitude	7024	1	I	R	%	Path 5.2 amplitude in per cent
P-16	p5.1 AGC-level	6048	2	F	R	dB	Path 5.1 Automated Gain Control
P-17	p5.2 AGC-level	6068	2	F	R	dB	Path 5.2 Automated Gain Control
P-18	p5.1 snr	6648	2	F	R	dB	Path 5.1 signal-to-noise ratio
P-19	p5.2 snr	6668	2	F	R	dB	Path 5.2 signal-to-noise ratio
P-20	path-5 fault (X)	2274	1	I	R	hex	Path 5 path error (3X-measurement)
P-21	p5.1 AGC-level (X)	6688	2	F	R	dB	Path 5.1 Automated Gain Control (3X-measurement)
P-22	p5.2 AGC-level (X)	6708	2	F	R	dB	Path 5.2 Automated Gain Control (3X-measurement)
P-23	p5.1 snr (X)	6728	2	F	R	dB	Path 5.1 signal-to-noise ratio (3X-measurement)
P-24	p5.2 snr (X)	6748	2	F	R	dB	Path 5.2 signal-to-noise ratio (3X-measurement)
P-26	path-5 turbulence	6784	2	F	R	%	Path 5 turbulence

Path6 Meas. Values

Coord.	Value	Reg.	No.	Type	Prot.	Unit	Description
Q-01	p6.1 time of flight	6110	2	F	R	us	Path 6.1 time of flight
Q-02	p6.2 time of flight	6130	2	F	R	us	Path 6.2 time of flight
Q-03	path-6 delta-t	6150	2	F	R	us	Path 6 time difference
Q-04	p6 delta-t corr.	6550	2	F	R	us	Path 6 corrected time difference
Q-06	Valid samples G6	7005	1	I	R	%	Path 6 valid measuring values in %
Q-07	path-6 velocity	6010	2	F	R	→ velocity unit	Path 6 path velocity

Q-08	velocity vc6	6210	2	F	R	→ velocity unit	Path 6 corrected path velocity vc
Q-09	SoS6	6030	2	F	R	→ velocity unit	Path 6 Speed of Sound
Q-10	path-6 delta SoS	6090	2	F	R	%	Path 6 Path-SoS / Mean-SoS
Q-12	path-6 fault	4035	1	I	R	hex	Path 6 path error
Q-13	path-6 status	4045	1	I	R	hex	Path 6 path status
Q-14	p6.1 Amplitude	7015	1	I	R	%	Path 6.1 amplitude in per cent
Q-15	p6.2 Amplitude	7025	1	I	R	%	Path 6.2 amplitude in per cent
Q-16	p6.1 AGC-level	6050	2	F	R	dB	Path 6.1 Automated Gain Control
Q-17	p6.2 AGC-level	6070	2	F	R	dB	Path 6.2 Automated Gain Control
Q-18	p6.1 snr	6650	2	F	R	dB	Path 6.1 signal-to-noise ratio
Q-19	p6.2 snr	6670	2	F	R	dB	Path 6.2 signal-to-noise ratio
Q-20	path-6 fault (X)	2275	1	I	R	hex	Path 6 path error (3X-measurement)
Q-21	p6.1 AGC-level (X)	6690	2	F	R	dB	Path 6.1 Automated Gain Control (3X-measurement)
Q-22	p6.2 AGC-level (X)	6710	2	F	R	dB	Path 6.2 Automated Gain Control (3X-measurement)
Q-23	p6.1 snr (X)	6730	2	F	R	dB	Path 6.1 signal-to-noise ratio (3X-measurement)
Q-24	p6.2 snr (X)	6750	2	F	R	dB	Path 6.2 signal-to-noise ratio (3X-measurement)
Q-26	path-6 turbulence	6786	2	F	R	%	Path 6 turbulence

Path7 Meas. Values

Coord.	Value	Reg.	No.	Type	Prot.	Unit	Description
R-01	p7.1 time of flight	6112	2	F	R	us	Path 7.1 time of flight
R-02	p7.2 time of flight	6132	2	F	R	us	Path 7.2 time of flight
R-03	path-7 delta-t	6152	2	F	R	us	Path 7 time difference
R-04	p7 delta-t corr.	6552	2	F	R	us	Path 7 corrected time difference
R-06	Valid samples G7	7006	1	I	R	%	Path 7 valid measuring values in %
R-07	path-7 velocity	6012	2	F	R	→ velocity unit	Path 7 path velocity
R-08	velocity vc7	6212	2	F	R	→ velocity unit	Path 7 corrected path velocity vc
R-09	SoS7	6032	2	F	R	→ velocity unit	Path 7 Speed of Sound
R-10	path-7 delta SoS	6092	2	F	R	%	Path 7 Path-SoS / Mean-SoS
R-12	path-7 fault	4036	1	I	R	hex	Path 7 path error
R-13	path-7 status	4046	1	I	R	hex	Path 7 path status
R-14	p7.1 Amplitude	7016	1	I	R	%	Path 7.1 amplitude in per cent
R-15	p7.2 Amplitude	7026	1	I	R	%	Path 7.2 amplitude in per cent
R-16	p7.1 AGC-level	6052	2	F	R	dB	Path 7.1 Automated Gain Control
R-17	p7.2 AGC-level	6072	2	F	R	dB	Path 7.2 Automated Gain Control
R-18	p7.1 snr	6652	2	F	R	dB	Path 7.1 signal-to-noise ratio
R-19	p7.2 snr	6672	2	F	R	dB	Path 7.2 signal-to-noise ratio
R-20	path-7 fault (X)	2276	1	I	R	hex	Path 7 path error (3X-measurement)

R-21	p7.1 AGC-level (X)	6692	2	F	R	dB	Path 7.1 Automated Gain Control (3X-measurement)
R-22	p7.2 AGC-level (X)	6712	2	F	R	dB	Path 7.2 Automated Gain Control (3X-measurement)
R-23	p7.1 snr (X)	6732	2	F	R	dB	Path 7.1 signal-to-noise ratio (3X-measurement)
R-24	p7.2 snr (X)	6752	2	F	R	dB	Path 7.2 signal-to-noise ratio (3X-measurement)
R-26	path-7 turbulence	6788	2	F	R	%	Path 7 turbulence

Path8 Meas. Values

Coord.	Value	Reg.	No.	Type	Prot.	Unit	Description
S-01	p8.1 time of flight	6114	2	F	R	us	Path 8.1 time of flight
S-02	p8.2 time of flight	6134	2	F	R	us	Path 8.2 time of flight
S-03	path-8 delta-t	6154	2	F	R	us	Path 8 time difference
S-04	p8 delta-t corr.	6554	2	F	R	us	Path 8 corrected time difference
S-06	Valid samples G8	7007	1	I	R	%	Path 8 valid measuring values in %
S-07	path-8 velocity	6014	2	F	R	→ velocity unit	Path 8 path velocity
S-08	velocity vc8	6214	2	F	R	→ velocity unit	Path 8 corrected path velocity vc
S-09	SoS8	6034	2	F	R	→ velocity unit	Path 8 Speed of Sound
S-10	path-8 delta SoS	6094	2	F	R	%	Path 8 Path-SoS / Mean-SoS
S-12	path-8 fault	4037	1	I	R	hex	Path 8 path error
S-13	path-8 status	4047	1	I	R	hex	Path 8 path status
S-14	p8.1 Amplitude	7017	1	I	R	%	Path 8.1 amplitude in per cent
S-15	p8.2 Amplitude	7027	1	I	R	%	Path 8.2 amplitude in per cent
S-16	p8.1 AGC-level	6054	2	F	R	dB	Path 8.1 Automated Gain Control
S-17	p8.2 AGC-level	6074	2	F	R	dB	Path 8.2 Automated Gain Control
S-18	p8.1 snr	6654	2	F	R	dB	Path 8.1 signal-to-noise ratio
S-19	p8.2 snr	6674	2	F	R	dB	Path 8.2 signal-to-noise ratio
S-20	path-8 fault (X)	2277	1	I	R	hex	Path 8 path error (3X-measurement)
S-21	p8.1 AGC-level (X)	6694	2	F	R	dB	Path 8.1 Automated Gain Control (3X-measurement)
S-22	p8.2 AGC-level (X)	6714	2	F	R	dB	Path 8.2 Automated Gain Control (3X-measurement)
S-23	p8.1 snr (X)	6734	2	F	R	dB	Path 8.1 signal-to-noise ratio (3X-measurement)
S-24	p8.2 snr (X)	6754	2	F	R	dB	Path 8.2 signal-to-noise ratio (3X-measurement)
S-26	path-8 turbulence	6790	2	F	R	%	Path 8 turbulence

Path1 Sig. Analysis

Coord.	Value	Reg.	No.	Type	Prot.	Unit	Description
T-01	p1.1 tw offset	6600	2	F	R	us	Path 1.1 corrected delay time
T-02	p1.2 tw offset	6620	2	F	R	us	Path 1.2 corrected delay time
T-03	p1 Tw damped	6830	2	F	R	us	Path 1 delay time TwD

Path2 Sig. Analysis

Coord.	Value	Reg.	No.	Type	Prot.	Unit	Description
U-01	p2.1 tw offset	6602	2	F	R	us	Path 2.1 corrected delay time
U-02	p2.2 tw offset	6622	2	F	R	us	Path 2.2 corrected delay time
U-03	p2 Tw damped	6832	2	F	R	us	Path 2 delay time TwD

Path3 Sig. Analysis

Coord.	Value	Reg.	No.	Type	Prot.	Unit	Description
V-01	p3.1 tw offset	6604	2	F	R	us	Path 3.1 corrected delay time
V-02	p3.2 tw offset	6624	2	F	R	us	Path 3.2 corrected delay time
V-03	p3 Tw damped	6834	2	F	R	us	Path 3 delay time TwD

Path4 Sig. Analysis

Coord.	Value	Reg.	No.	Type	Prot.	Unit	Description
W-01	p4.1 tw offset	6606	2	F	R	us	Path 4.1 corrected delay time
W-02	p4.2 tw offset	6626	2	F	R	us	Path 4.2 corrected delay time
W-03	p4 Tw damped	6836	2	F	R	us	Path 4 delay time TwD

Path5 Sig. Analysis

Coord.	Value	Reg.	No.	Type	Prot.	Unit	Description
X-01	p5.1 tw offset	6608	2	F	R	us	Path 5.1 corrected delay time
X-02	p5.2 tw offset	6628	2	F	R	us	Path 5.2 corrected delay time
X-03	p5 Tw damped	6838	2	F	R	us	Path 5 delay time TwD

Path6 Sig. Analysis

Coord.	Value	Reg.	No.	Type	Prot.	Unit	Description
Y-01	p6.1 tw offset	6610	2	F	R	us	Path 6.1 corrected delay time
Y-02	p6.2 tw offset	6630	2	F	R	us	Path 6.2 corrected delay time
Y-03	p6 Tw damped	6840	2	F	R	us	Path 6 delay time TwD

Path7 Sig. Analysis

Coord.	Value	Reg.	No.	Type	Prot.	Unit	Description
Z-01	p7.1 tw offset	6612	2	F	R	us	Path 7.1 corrected delay time
Z-02	p7.2 tw offset	6632	2	F	R	us	Path 7.2 corrected delay time
Z-03	p7 Tw damped	6842	2	F	R	us	Path 7 delay time TwD

Path8 Sig. Analysis

Coord.	Value	Reg.	No.	Type	Prot.	Unit	Description
AA-01	p8.1 tw offset	6614	2	F	R	us	Path 8.1 corrected delay time
AA-02	p8.2 tw offset	6634	2	F	R	us	Path 8.2 corrected delay time
AA-03	p8 Tw damped	6844	2	F	R	us	Path 8 delay time TwD

USE09 meas. val.

Coord.	Value	Reg.	No.	Type	Prot.	Unit	Description
AB-01	SoS average	6228	2	F	R	→ velocity unit	Average Speed of Sound over all paths
AB-02	p.1 AGC average	6056	2	F	R	dB	Path x.1 average AGC over all paths
AB-03	p.2 AGC average	6076	2	F	R	dB	Path x.2 average AGC over all paths

USE09 Diagnosis

Coord.	Value	Reg.	No.	Type	Prot.	Unit	Description
AC-01	Vz plane-1	6560	2	F	R	→ velocity unit	Velocity Vz of plane 1
AC-02	Vz plane-2	6562	2	F	R	→ velocity unit	Velocity Vz of plane 2
AC-03	Vz plane-3	6564	2	F	R	→ velocity unit	Velocity Vz of plane 3
AC-04	Vz plane-4	6566	2	F	R	→ velocity unit	Velocity Vz of plane 4
AC-05	Vx plane-1	6568	2	F	R	→ velocity unit	Velocity Vx of plane 1
AC-06	Vx plane-2	6570	2	F	R	→ velocity unit	Velocity Vx of plane 2
AC-07	Vx plane-3	6572	2	F	R	→ velocity unit	Velocity Vx of plane 3
AC-08	Vx plane-4	6574	2	F	R	→ velocity unit	Velocity Vx of plane 4
AC-09	Ve plane-1	6576	2	F	R	→ velocity unit	Velocity V of plane 1
AC-10	Ve plane-2	6578	2	F	R	→ velocity unit	Velocity V of plane 2
AC-11	Ve plane-3	6580	2	F	R	→ velocity unit	Velocity V of plane 3
AC-12	Ve plane-4	6582	2	F	R	→ velocity unit	Velocity V of plane 4
AC-15	Swirl Angle Plane-1	6584	2	F	R	°	Swirl angle of plane 1
AC-16	Swirl Angle Plane-2	6586	2	F	R	°	Swirl angle of plane 2
AC-17	Swirl Angle Plane-3	6588	2	F	R	°	Swirl angle of plane 3
AC-18	Swirl Angle Plane-4	6590	2	F	R	°	Swirl angle of plane 4

AC-20	Profile PFY1	6800	2	F	R		Profile factor PFY1
AC-21	Profile PFY2	6802	2	F	R		Profile factor PFY2
AC-22	Profile PFY	6804	2	F	R		Profile factor PFY
AC-23	Profile PFY31	6806	2	F	R		Profile factor PFY31
AC-24	Profile PFY35	6808	2	F	R		Profile factor PFY35
AC-25	Profile PFY42	6810	2	F	R		Profile factor PFY42
AC-26	Profile PFY46	6812	2	F	R		Profile factor PFY46
AC-27	Profile PFX	6814	2	F	R		Profile factor PFX
AC-28	Profile PFX12	6816	2	F	R		Profile factor PFX12
AC-29	Profile PFX56	6818	2	F	R		Profile factor PFX56
AC-30	Profile Factor	6820	2	F	R		Diagnosis: Profile factor
AC-31	Symmetry X	6822	2	F	R		Symmetry X
AC-32	Symmetry Y	6824	2	F	R		Symmetry Y
AC-33	Symmetry	6826	2	F	R		Symmetry

Time and Date

Coord.	Value	Reg.	No.	Type	Prot.	Unit	Description
AD-01	time	2560	2	U	F		date and time

USE09-C Totalizers

Coord.	Value	Reg.	No.	Type	Prot.	Unit	Description		
AE-01	Tot. Volume d.1	3000	4	D	CS	→ volume unit	Actual volume counter for direction 1		
AE-02	Tot. Volume d.2	3004	4	D	CS	→ volume unit	Actual volume counter for direction 2		
AE-04	Tot. VolumeErr d.1	3008	4	D	CS	→ volume unit	Actual disturbed volume counter for direction 1		
AE-05	Tot. VolumeErr d.2	3012	4	D	CS	→ volume unit	Actual disturbed volume counter for direction 2		
AE-07	Tot. VolumeSum d.1	3016	4	D	CS	→ volume unit	Actual summarized volume counter for direction 1		
AE-08	Tot. VolumeSum d.2	3020	4	D	CS	→ volume unit	Actual summarized volume counter for direction 2		
AE-09	Total Volume	3024	4	D	CS	→ volume unit	Total volume totalizer for volume at measurement conditions, both directions		
AE-10	tot. Error-mode	2096	1	M	S		Error mode of Vm and test totalizers		
							0x0000	STOP	(d)
							0x0001	RUN	
AE-11	Total Volume mode	2098	1	M	S		Mode of the total volume totalizer (VO)		
							0x0000	D1 - D2	(d)
							0x0001	DIRECTION_1	
							0x0002	DIRECTION_2	
AE-20	test-tot. mode	2097	1	M	F		Start/stop of the Vm test totalizers		

							0x0000	STOP	(d)
							0x0001	RUN	
AE-21	Vm-dir.1 test sum	3040	4	D	R	→ volume unit	Actual volume test-counter for direction 1		
AE-22	Vm-dir.2 test sum	3044	4	D	R	→ volume unit	Actual volume test-counter for direction 2		
AE-23	time for test sum	6242	2	F	R	s	Duration of on-the-fly calibration		
AE-30	Unit LF-Volumes	2217	1	M	F		Unit (factor) for totalizers of type LONG		
							0x0000	x 1	(d)
							0x0001	x 0.1	
							0x0002	x 0.01	
AE-31	L: Tot. Volume d.1	2600	2	L	R	→ Unit LF-Volumes	Copy of Vm totalizer, direction 1 (with factor in Long format)		
AE-32	L: Tot. Volume d.2	2602	2	L	R	→ Unit LF-Volumes	Copy of Vm totalizer, direction 2 (with factor in Long format)		
AE-34	L: Tot. Vol.Err d.1	2604	2	L	R	→ Unit LF-Volumes	Copy of disturbing Vm totalizer, direction 1 (with factor in Long format)		
AE-35	L: Tot. Vol.Err d.2	2606	2	L	R	→ Unit LF-Volumes	Copy of disturbing Vm totalizer, direction 2 (with factor in Long format)		
AE-37	L: Tot. Vol.Sum d.1	2608	2	L	R	→ Unit LF-Volumes	Copy of total volume totalizer (Vm+VmD), direction 1 (with factor in Long format)		
AE-38	L: Tot. Vol.Sum d.2	2610	2	L	R	→ Unit LF-Volumes	Copy of total volume totalizer (Vm+VmD), direction 2 (with factor in Long format)		
AE-39	L: Total Volume	2612	2	L	R	→ Unit LF-Volumes	Copy of Vm total volume totalizer (with factor in Long format)		

ID

Coord.	Value	Reg.	No.	Type	Prot.	Unit	Description		
AF-01	electronic type	500	10	T	S		ID: Device type		
AF-02	electronic no	2564	2	L	S		ID: Device No.		
AF-03	unit type	510	10	T	S		ID: Type of measuring element		
AF-04	unit no	2562	2	L	S		ID: Measuring element No.		
AF-05	manufacturer	2151	1	M	S		ID: Manufacturer of the USE09		
							0x0000	RMG	(d)
AF-06	model (year)	2152	1	I	S		ID: Year of construction of the USE09 (DZU interface)		
AF-07	meter size	520	10	T	S		ID: Meter size		
AF-08	nominal diameter DN	2210	1	I	S	→ Calib. units: Length	ID: Nominal diameter DN		
AF-09	pressure rating	740	10	T	S		ID: Pressure rating		
AF-10	pipe flange type	2211	1	M	S		ID: Flange standard		
							0x0000	PN	(d)
							0x0001	ANSI	
AF-11	pipe flange value	2212	1	I	S		ID: Flange value		
AF-12	Qmin	1346	2	F	S	→ flow unit	ID: q-min		

AF-13	Qmax	1348	2	F	S	→ flow unit	ID: q-max		
AF-14	pmin	1350	2	F	S	→ Units: Pressure g	ID: Calibration pressure min		
AF-15	pmax	1352	2	F	S	→ Units: Pressure g	ID: Calibration pressure max		
AF-16	meas.press. min	1520	2	F	S	→ Units: Pressure a	ID: Measuring pressure min		
AF-17	meas.press. max	1522	2	F	S	→ Units: Pressure a	ID: Measuring pressure max		
AF-18	Tmin	1354	2	F	S	→ Units: Temp.	ID: T-min		
AF-21	Tmax	1356	2	F	S	→ Units: Temp.	ID: T-max		
AF-23	gas type	2154	1	M	S		ID: Gas type		
							0x0000	NATURAL GAS	(d)
AF-24	p type	2155	1	M	S		ID: P-type		
							0x0000	3051CA	(d)
							0x0001	G1151Ap	
							0x0002	G1151	
							0x0003	2088A	
AF-25	p no.	2566	2	L	S		ID: P-No.		
AF-26	T type	2156	1	M	S		ID: T-type		
							0x0000	AGG-EX	(d)
							0x0001	Q-4407	
							0x0002	PT100	
							0x0003	F-56	
							0x0004	F-57	
AF-27	T no	2568	2	L	S		ID: T-No.		
AF-28	Transducer type	9072	10	T	S		ID: Transducer type		
AF-29	Transducer 1.1 no.	530	10	T	S		ID: transducer 1/1 No.		
AF-30	Transducer 1.1 len.	1524	2	F	S	→ Calib. units: Length	ID: transducer 1/1 length		
AF-31	Transducer 1.1 built	2291	1	I	S		ID: transducer 1/1 year of manufacture		
AF-32	Transducer 1.2 no.	540	10	T	S		ID: transducer 1/2 No.		
AF-33	Transducer 1.2 len.	1526	2	F	S	→ Calib. units: Length	ID: transducer 1/2 length		
AF-34	Transducer 1.2 built	2292	1	I	S		ID: transducer 1/2 year of manufacture		
AF-35	Transducer 2.1 no.	550	10	T	S		ID: transducer 2/1 No.		
AF-36	Transducer 2.1 len.	1528	2	F	S	→ Calib. units: Length	ID: transducer 2/1 length		
AF-37	Transducer 2.1 built	2293	1	I	S		ID: transducer 2/1 year of manufacture		
AF-38	Transducer 2.2 no.	560	10	T	S		ID: transducer 2/2 No.		
AF-39	Transducer 2.2 len.	1530	2	F	S	→ Calib. units: Length	ID: transducer 2/2 length		
AF-40	Transducer 2.2 built	2294	1	I	S		ID: transducer 2/2 year of manufacture		
AF-41	Transducer 3.1 no.	570	10	T	S		ID: transducer 3/1 No.		
AF-42	Transducer 3.1 len.	1532	2	F	S	→ Calib. units: Length	ID: transducer 3/1 length		

AF-43	Transducer 3.1 built	2295	1	I	S		ID: transducer 3/1 year of manufacture
AF-44	Transducer 3.2 no.	580	10	T	S		ID: transducer 3/2 No.
AF-45	Transducer 3.2 len.	1534	2	F	S	→ Calib. units: Length	ID: transducer 3/2 length
AF-46	Transducer 3.2 built	2296	1	I	S		ID: transducer 3/2 year of manufacture
AF-47	Transducer 4.1 no.	590	10	T	S		ID: transducer 4/1 No.
AF-48	Transducer 4.1 len.	1536	2	F	S	→ Calib. units: Length	ID: transducer 4/1 length
AF-49	Transducer 4.1 built	2297	1	I	S		ID: transducer 4/1 year of manufacture
AF-50	Transducer 4.2 no.	600	10	T	S		ID: transducer 4/2 No.
AF-51	Transducer 4.2 len.	1538	2	F	S	→ Calib. units: Length	ID: transducer 4/2 length
AF-52	Transducer 4.2 built	2298	1	I	S		ID: transducer 4/2 year of manufacture
AF-53	Transducer 5.1 no.	610	10	T	S		ID: transducer 5/1 No.
AF-54	Transducer 5.1 len.	1540	2	F	S	→ Calib. units: Length	ID: transducer 5/1 length
AF-55	Transducer 5.1 built	2299	1	I	S		ID: transducer 5/1 year of manufacture
AF-56	Transducer 5.2 no.	620	10	T	S		ID: transducer 5/2 No.
AF-57	Transducer 5.2 len.	1542	2	F	S	→ Calib. units: Length	ID: transducer 5/2 length
AF-58	Transducer 5.2 built	2300	1	I	S		ID: transducer 5/2 year of manufacture
AF-59	Transducer 6.1 no.	630	10	T	S		ID: transducer 6/1 No.
AF-60	Transducer 6.1 len.	1544	2	F	S	→ Calib. units: Length	ID: transducer 6/1 length
AF-61	Transducer 6.1 built	2301	1	I	S		ID: transducer 6/1 year of manufacture
AF-62	Transducer 6.2 no.	640	10	T	S		ID: transducer 6/2 No.
AF-63	Transducer 6.2 len.	1546	2	F	S	→ Calib. units: Length	ID: transducer 6/2 length
AF-64	Transducer 6.2 built	2302	1	I	S		ID: transducer 6/2 year of manufacture
AF-65	Transducer 7.1 no.	650	10	T	S		ID: transducer 7/1 No.
AF-66	Transducer 7.1 len.	1548	2	F	S	→ Calib. units: Length	ID: transducer 7/1 length
AF-67	Transducer 7.1 built	2303	1	I	S		ID: transducer 7/1 year of manufacture
AF-68	Transducer 7.2 no.	660	10	T	S		ID: transducer 7/2 No.
AF-69	Transducer 7.2 len.	1550	2	F	S	→ Calib. units: Length	ID: transducer 7/2 length
AF-70	Transducer 7.2 built	2304	1	I	S		ID: transducer 7/2 year of manufacture
AF-71	Transducer 8.1 no.	670	10	T	S		ID: transducer 8/1 No.
AF-72	Transducer 8.1 len.	1552	2	F	S	→ Calib. units: Length	ID: transducer 8/1 length
AF-73	Transducer 8.1 built	2305	1	I	S		ID: transducer 8/1 year of manufacture
AF-74	Transducer 8.2 no.	680	10	T	S		ID: transducer 8/2 No.

AF-75	Transducer 8.2 len.	1554	2	F	S	→ Calib. units: Length	ID: transducer 8/2 length
AF-76	Transducer 8.2 built	2306	1	I	S		ID: transducer 8/2 year of manufacture
AF-77	serial number USE09	790	10	T	S		ID: serial number USE09
AF-78	version	100	2	F	R		ID: M32C software version
AF-79	CPU CRC	201	1	I	R	hex	ID: M32C CRC-16
AF-80	Matrix version	200	1	I	R		ID: M32C Matrix version
AF-81	DSP version	102	2	F	R		ID: DSP software version
AF-82	DSP CRC	202	1	I	R	hex	ID: DSP CRC-16
AF-83	FPGA version	104	2	F	R		ID: FPGA software version
AF-84	FPGA CRC	203	1	I	R	hex	ID: FPGA CRC-16
AF-85	fiscal par. CRC	204	1	I	R	hex	ID: fiscally parameters crc-16
AF-86	piecewise lin. CRC	205	1	I	R	hex	ID: piecewise linearization parameters crc-16

Mode

Coord.	Value	Reg.	No.	Type	Prot.	Unit	Description		
AG-04	codeword	750	10	C	F		Entry of codeword		
AG-26	test working mode	2185	1	M	S		Test mode for debugging the DSP		
							0x0000	OFF	(d)
							0x0001	DEBUG	
							0x0002	WD	
AG-27	Display, LED test	65535	10	T	R		Display test, bottom		
AG-28	Test LEDs	4080	1	M	C		Tests the LEDs on the front panel		
							0x0000	OFF	(d)
							0x0001	TEST	
AG-30	language	2094	1	M	C		Selection of language		
							0x0000	GERMAN	(d)
							0x0001	ENGLISH	
AG-31	units	2095	1	M	CS		Selection of units		
							0x0000	METRICAL-UNITS	(d)
							0x0001	IMPERIAL-UNITS	
AG-32	velocity unit	7030	1	M	R		Unit: Velocities		
							0x0000	m/s	
							0x0001	ft/s	
AG-33	flow unit	7031	1	M	R		Unit: Flow rate		
							0x0000	m3/h	
							0x0001	acfh	
AG-34	volume unit	7032	1	M	R		Unit: Totalizers		

							0x0000	m3	
							0x0001	acf	
AG-35	pulse unit	7033	1	M	R		Unit: Pulse value		
							0x0000	Imp/m3	
							0x0001	Imp/cf	
AG-36	Units: Temp.	7035	1	M	S		Unit: temperature		
							0x0000	°C	(d)
							0x0001	°F	
							0x0002	K	
							0x0003	°Ra	
AG-37	Units: Pressure	7036	1	M	S		Unit: pressure		
							0x0000	bar	(d)
							0x0001	psi	
AG-38	Units: Pressure a	7037	1	M	R		Unit: absolute pressure		
							0x0000	bar_a	
							0x0001	psi_a	
AG-39	Units: Pressure g	7038	1	M	R		Unit: relative pressure		
							0x0000	bar_g	
							0x0001	psi_g	
AG-40	Calib. units: Length	7039	1	M	S		Calibration unit: length		
							0x0000	mm	(d)
							0x0001	in	
AG-41	Calib. units: v	7040	1	M	S		Calibration unit: speed		
							0x0000	m/s	(d)
							0x0001	ft/s	
AG-42	Calib. units: Q	7041	1	M	S		Calibration unit: flow		
							0x0000	m3/h	(d)
							0x0001	acfh	

Faults

Coord.	Value	Reg.	No.	Type	Prot.	Unit	Description
AH-01	fault message	710	10	T	R		Fault message as rolling text
AH-02	fault time	7500	2	U	R		Date and time of the fault
AH-03	clear fault	2126	1	M	F		Clear fault
							0x0000 NO (d)
							0x0001 YES
AH-04	fault mode	2127	1	M	S		Fault mode below Qm-min
							0x0000 NORMAL (d)
							0x0001 ALL

AH-05	fault display mode	2128	1	M	S		Fault display mode active: Shows all currently active faults		
							0x0000	NORMAL	(d)
							0x0001	ACTIVE	
AH-06	path error mode	2129	1	M	S		Error mode in the case of a path failure		
							0x0000	WARNING	(d)
							0x0001	ALARM	
AH-07	fault,warn contact	2254	1	M	F		Mode for alarm and warning contact		
							0x0000	NORMAL	(d)
							0x0001	5_SECONDS	
							0x0002	HOLD	
AH-09	path ok	700	10	T	R		Indication of the path status (path monitoring is considered)		
AH-10	hint status	4008	1	M	R		Current hint status		
							0x0000	OFF	
							0x0001	ON	
							0x0002	QUIT	
AH-11	warning status	4001	1	M	R		Current warning status		
							0x0000	OFF	
							0x0001	ON	
							0x0002	QUIT	
AH-12	warn contact	4120	1	M	R		Current warning contact		
							0x0000	OFF	
							0x0001	ON	
AH-13	fault status	4000	1	M	R		Current alarm status		
							0x0000	OFF	
							0x0001	ON	
							0x0002	QUIT	
AH-14	fault contact	4121	1	M	R		Current alarm contact		
							0x0000	OFF	
							0x0001	ON	
AH-15	USE09 device status	4002	1	I	R	hex	USE09 device status		
AH-16	Fault bit 0-15	4010	1	I	R	hex	Active faults (bit-coded) 0-15		
AH-17	Fault bit 16-31	4011	1	I	R	hex	Active faults (bit-coded) 16-31		
AH-18	Fault bit 32-47	4012	1	I	R	hex	Active faults (bit-coded) 32-47		
AH-19	Fault bit 48-63	4013	1	I	R	hex	Active faults (bit-coded) 48-63		
AH-20	Fault bit 64-79	4014	1	I	R	hex	Active faults (bit-coded) 64-79		
AH-21	Fault bit 80-95	4015	1	I	R	hex	Active faults (bit-coded) 80-95		
AH-22	Fault bit 96-111	4016	1	I	R	hex	Active faults (bit-coded) 96-111		
AH-23	Fault bit 112-127	4017	1	I	R	hex	Active faults (bit-coded) 112-127		
AH-24	Fault bit 128-143	4018	1	I	R	hex	Active faults (bit-coded) 128-143		
AH-25	Fault bit 144-159	4019	1	I	R	hex	Active faults (bit-coded) 144-159		

AH-26	Fault bit 160-175	4020	1	I	R	hex	Active faults (bit-coded) 160-175
AH-27	Fault bit 176-191	4021	1	I	R	hex	Active faults (bit-coded) 176-191
AH-28	Fault bit 192-207	4022	1	I	R	hex	Active faults (bit-coded) 192-207

DSP Parameters

Coord.	Value	Reg.	No.	Type	Prot.	Unit	Description		
AI-09	number of batches	2136	1	I	C		Number of batches		
AI-10	Relay delay time	2137	1	I	S	ms	Relay delay time (RDT)		
AI-11	sample frequency	2138	1	M	S	MHz	Sample frequency in MHz		
							0x0000	1	
							0x0001	1,25	
							0x0002	1,67	
							0x0003	2	
							0x0004	2,5	
							0x0005	3,33	
							0x0006	4	
							0x0007	5	(d)
							0x0008	6,67	
							0x0009	10	
AI-12	fifo size	2139	1	M	S		Size of the receiving memory		
							0x0000	512	
							0x0001	1024	
							0x0002	2048	(d)
AI-13	FPGA testpin ctrl.	2214	1	I	F	hex	Hexadecimal control word for the FPGA test pins		
AI-14	transmission level	2140	1	I	S	%	Transmission level control in %		
AI-15	send mux time	1364	2	F	S	ms	Response time of transmit multiplexer in ms		
AI-16	receive mux time	1366	2	F	S	ms	Response time of receive multiplexer in ms		
AI-17	Attenuator mode	2141	1	M	S		Operating mode of the attenuator		
							0x0000	OFF	(d)
							0x0001	ON	
							0x0002	TEST	
							0x0003	AUTO_SEPA-RATE	
AI-18	Attenuator on	2142	1	I	S	dB	Limit for the attenuator ON		
AI-19	Attenuator off	2143	1	I	S	dB	Limit for the attenuator OFF		
AI-20	Attenuator HV	2144	1	I	S	dB	Limit for the attenuator HV mode		
AI-21	amp. regulator mode	2145	1	M	C		Operating mode of amplitude control		
							0x0000	SET VALUE	
							0x0001	ON	(d)

							0x0002	HOLD	
AI-22	amp. regulator min	2146	1	I	C	%	Min. range for amplitude control		
AI-23	amp. regulator max	2147	1	I	C	%	Max. range for amplitude control		
AI-24	amp. damping	1448	2	F	C		Damping for amplitude control		
AI-25	theoretical SoS	1368	2	F	S	→ velocity unit	Theoretical speed of sound of the fluid		
AI-26	ADC gain	2164	1	M	S		FPGA AD gain 0 dB, +6 dB, -6 dB		
							0x0000	1	(d)
							0x0001	2	
							0x0002	0.5	
AI-27	signal tracking	2169	1	M	C		Switches signal tracking on or off		
							0x0000	ON	
							0x0001	OFF	(d)
AI-28	max. track. Offset	2187	1	I	C	Tics	Max. size of the tracking window		
AI-37	corr. mode	2256	1	M	S		Correlation mode		
							0x0000	OFF	(d)
							0x0001	FADE_IN	
AI-38	corr. length	2189	1	I	S		Length of the correlation window		
AI-39	Batch: amp. min.	2279	1	I	S	%	Batch: Minimum amplitude		
AI-47	AmplitudeMin	2000	1	I	S	%	Limit for the input signal (Low)		
AI-48	AmplitudeMax	2010	1	I	S	%	Limit for the input signal (High)		
AI-49	Vmin	1000	2	F	S	→ Calib. units: v	Lower limit for the flow velocity		
AI-50	Vmax	1020	2	F	S	→ Calib. units: v	Upper limit for the flow velocity		
AI-51	Cmin	1040	2	F	S	→ Calib. units: v	Lower limit for the speed of sound		
AI-52	Cmax	1060	2	F	S	→ Calib. units: v	Upper limit for the speed of sound		

DSP Parameters 3X

Coord.	Value	Reg.	No.	Type	Prot.	Unit	Description		
AJ-07	corr. mode (X)	2257	1	M	S		Correlation mode (3X measurement)		
							0x0000	OFF	(d)
							0x0001	FADE_IN	
AJ-09	Batch: amp. min.	2280	1	I	S	%	Batch: Minimum amplitude (3X measurement)		

Path1 Parameters

Coord.	Value	Reg.	No.	Type	Prot.	Unit	Description		
AK-09	p1 f-trans set val	2500	2	L	S	Hz	Path 1 transmit frequency intended value in Hz		
AK-10	path-1 trans. freq.	2520	2	L	R	Hz	Path 1 transmit frequency actual value in Hz		
AK-11	path-1 band limits	2190	1	I	S	%	Path 1 limits to observe		
AK-12	path-1 trans.pulses	2040	1	I	S		Path 1 number of transmit pulses		
AK-13	p1 filter selection	2170	1	M	S	kHz	Path 1 DSP filter selection		
							0x0000	50	
							0x0001	75	
							0x0002	100	(d)
							0x0003	125	
							0x0004	150	
							0x0005	175	
							0x0006	200	
							0x0007	225	
							0x0008	250	
							0x0009	275	
							0x000a	300	
							0x000b	325	
AK-14	path-1 tw	1080	2	F	S	us	Path 1 delay time		
AK-16	path-1 DAC-G1 cmd	2050	1	I	S		Path 1 DAC-G1 command register		
AK-17	path-1 DAC-G1 val	2060	1	I	S		Path 1 DAC-G1 data register		
AK-18	path-1 DAC-G2 cmd	2070	1	I	S		Path 1 DAC-G2 command register		
AK-19	path-1 DAC-G2 val	2080	1	I	S		Path 1 DAC-G2 data register		
AK-20	p1 blanking delay	1100	2	F	R	us	Path 1 blanking delay		
AK-21	p1 blanking count	2540	2	L	R	tic	Path 1 blanking count		
AK-22	path-1 decay time	1120	2	F	S	ms	Path 1 pulse decay time		
AK-23	path-1 path length	1140	2	F	S	→ Calib. units:	Length Path 1 path length		
AK-24	path-1 axial dist.	1160	2	F	S	→ Calib. units:	Length Path 1 smallest path distance		
AK-25	p1 assembly angle	1500	2	F	S	°	Path 1 assembly angle		
AK-26	p1 delta-t offset	1420	2	F	S	us	Path 1 time difference offset		
AK-29	const w1	1240	2	F	S	[1]	Path 1 weigthing factor w1		
AK-30	p1 tic offset	2200	1	I	S	tic	Path 1 tic offset		
AK-31	p1 tic offset (X)	2260	1	I	S	tic	Path 1 tic offset (3X-measurement)		
AK-32	p1 AGC-limit	2220	1	I	S	dB	Path 1 AGC limit		
AK-34	p1 no. of f-batches	2312	1	I	C		Path 1 no. of measurement (FBatches)		

Path2 Parameters

Coord.	Value	Reg.	No.	Type	Prot.	Unit	Description		
AL-09	p2 f-trans set val	2502	2	L	S	Hz	Path 2 transmit frequency intended value in Hz		
AL-10	path-2 trans. freq.	2522	2	L	R	Hz	Path 2 transmit frequency actual value in Hz		
AL-11	path-2 band limits	2191	1	I	S	%	Path 2 limits to observe		
AL-12	path-2 trans.pulses	2041	1	I	S		Path 2 number of transmit pulses		
AL-13	p2 filter selection	2171	1	M	S	kHz	Path 2 DSP filter selection		
							0x0000	50	
							0x0001	75	
							0x0002	100	(d)
							0x0003	125	
							0x0004	150	
							0x0005	175	
							0x0006	200	
							0x0007	225	
							0x0008	250	
							0x0009	275	
							0x000a	300	
							0x000b	325	
AL-14	path-2 tw	1082	2	F	S	us	Path 2 delay time		
AL-16	path-2 DAC-G1 cmd	2051	1	I	S		Path 2 DAC-G1 command register		
AL-17	path-2 DAC-G1 val	2061	1	I	S		Path 2 DAC-G1 data register		
AL-18	path-2 DAC-G2 cmd	2071	1	I	S		Path 2 DAC-G2 command register		
AL-19	path-2 DAC-G2 val	2081	1	I	S		Path 2 DAC-G2 data register		
AL-20	p2 blanking delay	1102	2	F	R	us	Path 2 blanking delay		
AL-21	p2 blanking count	2542	2	L	R	tic	Path 2 blanking count		
AL-22	path-2 decay time	1122	2	F	S	ms	Path 2 pulse decay time		
AL-23	path-2 path length	1142	2	F	S	→ Calib. units:	Length Path 2 path length		
AL-24	path-2 axial dist.	1162	2	F	S	→ Calib. units:	Length Path 2 smallest path distance		
AL-25	p2 assembly angle	1502	2	F	S	°	Path 2 assembly angle		
AL-26	p2 delta-t offset	1422	2	F	S	us	Path 2 time difference offset		
AL-29	const w2	1242	2	F	S	[1]	Path 2 weigthing factor w2		
AL-30	p2 tic offset	2201	1	I	S	tic	Path 2 tic offset		
AL-31	p2 tic offset (X)	2261	1	I	S	tic	Path 2 tic offset (3X-measurement)		
AL-32	p2 AGC-limit	2221	1	I	S	dB	Path 2 AGC limit		
AL-34	p2 no. of f-batches	2313	1	I	C		Path 2 no. of measurement (FBatches)		

Path3 Parameters

Coord.	Value	Reg.	No.	Type	Prot.	Unit	Description		
AM-09	p3 f-trans set val	2504	2	L	S	Hz	Path 3 transmit frequency intended value in Hz		
AM-10	path-3 trans. freq.	2524	2	L	R	Hz	Path 3 transmit frequency actual value in Hz		
AM-11	path-3 band limits	2192	1	I	S	%	Path 3 limits to observe		
AM-12	path-3 trans.pulses	2042	1	I	S		Path 3 number of transmit pulses		
AM-13	p3 filter selection	2172	1	M	S	kHz	Path 3 DSP filter selection		
							0x0000	50	
							0x0001	75	
							0x0002	100	(d)
							0x0003	125	
							0x0004	150	
							0x0005	175	
							0x0006	200	
							0x0007	225	
							0x0008	250	
							0x0009	275	
							0x000a	300	
							0x000b	325	
AM-14	path-3 tw	1084	2	F	S	us	Path 3 delay time		
AM-16	path-3 DAC-G1 cmd	2052	1	I	S		Path 3 DAC-G1 command register		
AM-17	path-3 DAC-G1 val	2062	1	I	S		Path 3 DAC-G1 data register		
AM-18	path-3 DAC-G2 cmd	2072	1	I	S		Path 3 DAC-G2 command register		
AM-19	path-3 DAC-G2 val	2082	1	I	S		Path 3 DAC-G2 data register		
AM-20	p3 blanking delay	1104	2	F	R	us	Path 3 blanking delay		
AM-21	p3 blanking count	2544	2	L	R	tic	Path 3 blanking count		
AM-22	path-3 decay time	1124	2	F	S	ms	Path 3 pulse decay time		
AM-23	path-3 path length	1144	2	F	S	→ Calib. units:	Length Path 3 path length		
AM-24	path-3 axial dist.	1164	2	F	S	→ Calib. units:	Length Path 3 smallest path distance		
AM-25	p3 assembly angle	1504	2	F	S	°	Path 3 assembly angle		
AM-26	p3 delta-t offset	1424	2	F	S	us	Path 3 time difference offset		
AM-29	const w3	1244	2	F	S	[1]	Path 3 weigthing factor w3		
AM-30	p3 tic offset	2202	1	I	S	tic	Path 3 tic offset		
AM-31	p3 tic offset (X)	2262	1	I	S	tic	Path 3 tic offset (3X-measurement)		
AM-32	p3 AGC-limit	2222	1	I	S	dB	Path 3 AGC limit		
AM-34	p3 no. of f-batches	2314	1	I	C		Path 3 no. of measurement (FBatches)		

Path4 Parameters

Coord.	Value	Reg.	No.	Type	Prot.	Unit	Description		
AN-09	p4 f-trans set val	2506	2	L	S	Hz	Path 4 transmit frequency intended value in Hz		
AN-10	path-4 trans. freq.	2526	2	L	R	Hz	Path 4 transmit frequency actual value in Hz		
AN-11	path-4 band limits	2193	1	I	S	%	Path 4 limits to observe		
AN-12	path-4 trans.pulses	2043	1	I	S		Path 4 number of transmit pulses		
AN-13	p4 filter selection	2173	1	M	S	kHz	Path 4 DSP filter selection		
							0x0000	50	
							0x0001	75	
							0x0002	100	(d)
							0x0003	125	
							0x0004	150	
							0x0005	175	
							0x0006	200	
							0x0007	225	
							0x0008	250	
							0x0009	275	
							0x000a	300	
							0x000b	325	
AN-14	path-4 tw	1086	2	F	S	us	Path 4 delay time		
AN-16	path-4 DAC-G1 cmd	2053	1	I	S		Path 4 DAC-G1 command register		
AN-17	path-4 DAC-G1 val	2063	1	I	S		Path 4 DAC-G1 data register		
AN-18	path-4 DAC-G2 cmd	2073	1	I	S		Path 4 DAC-G2 command register		
AN-19	path-4 DAC-G2 val	2083	1	I	S		Path 4 DAC-G2 data register		
AN-20	p4 blanking delay	1106	2	F	R	us	Path 4 blanking delay		
AN-21	p4 blanking count	2546	2	L	R	tic	Path 4 blanking count		
AN-22	path-4 decay time	1126	2	F	S	ms	Path 4 pulse decay time		
AN-23	path-4 path length	1146	2	F	S	→ Calib. units:	Length Path 4 path length		
AN-24	path-4 axial dist.	1166	2	F	S	→ Calib. units:	Length Path 4 smallest path distance		
AN-25	p4 assembly angle	1506	2	F	S	°	Path 4 assembly angle		
AN-26	p4 delta-t offset	1426	2	F	S	us	Path 4 time difference offset		
AN-29	const w4	1246	2	F	S	[1]	Path 4 weigthing factor w4		
AN-30	p4 tic offset	2203	1	I	S	tic	Path 4 tic offset		
AN-31	p4 tic offset (X)	2263	1	I	S	tic	Path 4 tic offset (3X-measurement)		
AN-32	p4 AGC-limit	2223	1	I	S	dB	Path 4 AGC limit		
AN-34	p4 no. of f-batches	2315	1	I	C		Path 4 no. of measurement (FBatches)		

Path5 Parameters

Coord.	Value	Reg.	No.	Type	Prot.	Unit	Description		
AO-09	p5 f-trans set val	2508	2	L	S	Hz	Path 5 transmit frequency intended value in Hz		
AO-10	path-5 trans. freq.	2528	2	L	R	Hz	Path 5 transmit frequency actual value in Hz		
AO-11	path-5 band limits	2194	1	I	S	%	Path 5 limits to observe		
AO-12	path-5 trans.pulses	2044	1	I	S		Path 5 number of transmit pulses		
AO-13	p5 filter selection	2174	1	M	S	kHz	Path 5 DSP filter selection		
							0x0000	50	
							0x0001	75	
							0x0002	100	(d)
							0x0003	125	
							0x0004	150	
							0x0005	175	
							0x0006	200	
							0x0007	225	
							0x0008	250	
							0x0009	275	
							0x000a	300	
							0x000b	325	
AO-14	path-5 tw	1088	2	F	S	us	Path 5 delay time		
AO-16	path-5 DAC-G1 cmd	2054	1	I	S		Path 5 DAC-G1 command register		
AO-17	path-5 DAC-G1 val	2064	1	I	S		Path 5 DAC-G1 data register		
AO-18	path-5 DAC-G2 cmd	2074	1	I	S		Path 5 DAC-G2 command register		
AO-19	path-5 DAC-G2 val	2084	1	I	S		Path 5 DAC-G2 data register		
AO-20	p5 blanking delay	1108	2	F	R	us	Path 5 blanking delay		
AO-21	p5 blanking count	2548	2	L	R	tic	Path 5 blanking count		
AO-22	path-5 decay time	1128	2	F	S	ms	Path 5 pulse decay time		
AO-23	path-5 path length	1148	2	F	S	→ Calib. units:	Length Path 5 path length		
AO-24	path-5 axial dist.	1168	2	F	S	→ Calib. units:	Length Path 5 smallest path distance		
AO-25	p5 assembly angle	1508	2	F	S	°	Path 5 assembly angle		
AO-26	p5 delta-t offset	1428	2	F	S	us	Path 5 time difference offset		
AO-29	const w5	1248	2	F	S	[1]	Path 5 weigthing factor w5		
AO-30	p5 tic offset	2204	1	I	S	tic	Path 5 tic offset		
AO-31	p5 tic offset (X)	2264	1	I	S	tic	Path 5 tic offset (3X-measurement)		
AO-32	p5 AGC-limit	2224	1	I	S	dB	Path 5 AGC limit		
AO-34	p5 no. of f-batches	2316	1	I	C		Path 5 no. of measurement (FBatches)		

Path6 Parameters

Coord.	Value	Reg.	No.	Type	Prot.	Unit	Description		
AP-09	p6 f-trans set val	2510	2	L	S	Hz	Path 6 transmit frequency intended value in Hz		
AP-10	path-6 trans. freq.	2530	2	L	R	Hz	Path 6 transmit frequency actual value in Hz		
AP-11	path-6 band limits	2195	1	I	S	%	Path 6 limits to observe		
AP-12	path-6 trans.pulses	2045	1	I	S		Path 6 number of transmit pulses		
AP-13	p6 filter selection	2175	1	M	S	kHz	Path 6 DSP filter selection		
							0x0000	50	
							0x0001	75	
							0x0002	100	(d)
							0x0003	125	
							0x0004	150	
							0x0005	175	
							0x0006	200	
							0x0007	225	
							0x0008	250	
							0x0009	275	
							0x000a	300	
							0x000b	325	
AP-14	path-6 tw	1090	2	F	S	us	Path 6 delay time		
AP-16	path-6 DAC-G1 cmd	2055	1	I	S		Path 6 DAC-G1 command register		
AP-17	path-6 DAC-G1 val	2065	1	I	S		Path 6 DAC-G1 data register		
AP-18	path-6 DAC-G2 cmd	2075	1	I	S		Path 6 DAC-G2 command register		
AP-19	path-6 DAC-G2 val	2085	1	I	S		Path 6 DAC-G2 data register		
AP-20	p6 blanking delay	1110	2	F	R	us	Path 6 blanking delay		
AP-21	p6 blanking count	2550	2	L	R	tic	Path 6 blanking count		
AP-22	path-6 decay time	1130	2	F	S	ms	Path 6 pulse decay time		
AP-23	path-6 path length	1150	2	F	S	→ Calib. units:	Length Path 6 path length		
AP-24	path-6 axial dist.	1170	2	F	S	→ Calib. units:	Length Path 6 smallest path distance		
AP-25	p6 assembly angle	1510	2	F	S	°	Path 6 assembly angle		
AP-26	p6 delta-t offset	1430	2	F	S	us	Path 6 time difference offset		
AP-29	const w6	1250	2	F	S	[1]	Path 6 weigthing factor w6		
AP-30	p6 tic offset	2205	1	I	S	tic	Path 6 tic offset		
AP-31	p6 tic offset (X)	2265	1	I	S	tic	Path 6 tic offset (3X-measurement)		
AP-32	p6 AGC-limit	2225	1	I	S	dB	Path 6 AGC limit		
AP-34	p6 no. of f-batches	2317	1	I	C		Path 6 no. of measurement (FBatches)		

Path7 Parameters

Coord.	Value	Reg.	No.	Type	Prot.	Unit	Description		
AQ-09	p7 f-trans set val	2512	2	L	S	Hz	Path 7 transmit frequency intended value in Hz		
AQ-10	path-7 trans. freq.	2532	2	L	R	Hz	Path 7 transmit frequency actual value in Hz		
AQ-11	path-7 band limits	2196	1	I	S	%	Path 7 limits to observe		
AQ-12	path-7 trans.pulses	2046	1	I	S		Path 7 number of transmit pulses		
AQ-13	p7 filter selection	2176	1	M	S	kHz	Path 7 DSP filter selection		
							0x0000	50	
							0x0001	75	
							0x0002	100	(d)
							0x0003	125	
							0x0004	150	
							0x0005	175	
							0x0006	200	
							0x0007	225	
							0x0008	250	
							0x0009	275	
							0x000a	300	
							0x000b	325	
AQ-14	path-7 tw	1092	2	F	S	us	Path 7 delay time		
AQ-16	path-7 DAC-G1 cmd	2056	1	I	S		Path 7 DAC-G1 command register		
AQ-17	path-7 DAC-G1 val	2066	1	I	S		Path 7 DAC-G1 data register		
AQ-18	path-7 DAC-G2 cmd	2076	1	I	S		Path 7 DAC-G2 command register		
AQ-19	path-7 DAC-G2 val	2086	1	I	S		Path 7 DAC-G2 data register		
AQ-20	p7 blanking delay	1112	2	F	R	us	Path 7 blanking delay		
AQ-21	p7 blanking count	2552	2	L	R	tic	Path 7 blanking count		
AQ-22	path-7 decay time	1132	2	F	S	ms	Path 7 pulse decay time		
AQ-23	path-7 path length	1152	2	F	S	→ Calib. units:	Length Path 7 path length		
AQ-24	path-7 axial dist.	1172	2	F	S	→ Calib. units:	Length Path 7 smallest path distance		
AQ-25	p7 assembly angle	1512	2	F	S	°	Path 7 assembly angle		
AQ-26	p7 delta-t offset	1432	2	F	S	us	Path 7 time difference offset		
AQ-29	const w7	1252	2	F	S	[1]	Path 7 weigthing factor w7		
AQ-30	p7 tic offset	2206	1	I	S	tic	Path 7 tic offset		
AQ-31	p7 tic offset (X)	2266	1	I	S	tic	Path 7 tic offset (3X-measurement)		
AQ-32	p7 AGC-limit	2226	1	I	S	dB	Path 7 AGC limit		
AQ-34	p7 no. of f-batches	2318	1	I	C		Path 7 no. of measurement (FBatches)		

Path8 Parameters

Coord.	Value	Reg.	No.	Type	Prot.	Unit	Description		
AR-09	p8 f-trans set val	2514	2	L	S	Hz	Path 8 transmit frequency intended value in Hz		
AR-10	path-8 trans. freq.	2534	2	L	R	Hz	Path 8 transmit frequency actual value in Hz		
AR-11	path-8 band limits	2197	1	I	S	%	Path 8 limits to observe		
AR-12	path-8 trans.pulses	2047	1	I	S		Path 8 number of transmit pulses		
AR-13	p8 filter selection	2177	1	M	S	kHz	Path 8 DSP filter selection		
							0x0000	50	
							0x0001	75	
							0x0002	100	(d)
							0x0003	125	
							0x0004	150	
							0x0005	175	
							0x0006	200	
							0x0007	225	
							0x0008	250	
							0x0009	275	
							0x000a	300	
							0x000b	325	
AR-14	path-8 tw	1094	2	F	S	us	Path 8 delay time		
AR-16	path-8 DAC-G1 cmd	2057	1	I	S		Path 8 DAC-G1 command register		
AR-17	path-8 DAC-G1 val	2067	1	I	S		Path 8 DAC-G1 data register		
AR-18	path-8 DAC-G2 cmd	2077	1	I	S		Path 8 DAC-G2 command register		
AR-19	path-8 DAC-G2 val	2087	1	I	S		Path 8 DAC-G2 data register		
AR-20	p8 blanking delay	1114	2	F	R	us	Path 8 blanking delay		
AR-21	p8 blanking count	2554	2	L	R	tic	Path 8 blanking count		
AR-22	path-8 decay time	1134	2	F	S	ms	Path 8 pulse decay time		
AR-23	path-8 path length	1154	2	F	S	→ Calib. units:	Length Path 8 path length		
AR-24	path-8 axial dist.	1174	2	F	S	→ Calib. units:	Length Path 8 smallest path distance		
AR-25	p8 assembly angle	1514	2	F	S	°	Path 8 assembly angle		
AR-26	p8 delta-t offset	1434	2	F	S	us	Path 8 time difference offset		
AR-29	const w8	1254	2	F	S	[1]	Path 8 weigthing factor w8		
AR-30	p8 tic offset	2207	1	I	S	tic	Path 8 tic offset		
AR-31	p8 tic offset (X)	2267	1	I	S	tic	Path 8 tic offset (3X-measurement)		
AR-32	p8 AGC-limit	2227	1	I	S	dB	Path 8 AGC limit		
AR-34	p8 no. of f-batches	2319	1	I	C		Path 8 no. of measurement (FBatches)		

Service

Coord.	Value	Reg.	No.	Type	Prot.	Unit	Description		
AS-01	CPU speed	2574	2	L	CS	Hz	Actual M32 clock speed		
AS-02	DSP speed	2576	2	L	S	Hz	Actual DSP clock speed		
AS-04	FPGA speed	2578	2	L	S	Hz	Actual FPGA clock speed		
AS-05	ext. card s.no.	2584	2	L	S		IO card s. No.		
AS-06	ext. ADC s.no.	2586	2	L	S		IO-ADC card s. No.		
AS-07	write opt.EEProm	2167	1	M	S		(Service key!) Writes paramet. in the OPT-EEP		
							0x0000	NO	(d)
							0x0001	YES	
AS-08	write ADC EEProm	2168	1	M	S		(Service key!) Writes paramet. in the OPT-ADC-EEP		
							0x0000	NO	(d)
							0x0001	YES	
AS-09	LCD lighting	2183	1	M	F		Display lighting if key is pressed or steady light		
							0x0000	KEY	(d)
							0x0001	always	
AS-10	parameter reset	2148	1	M	CS		Load new parameters		
							0x0000	NO	(d)
							0x0001	YES	
AS-12	RV reset	2149	1	M	C		Clear replacement values		
							0x0000	NO	(d)
							0x0001	YES	
AS-13	RV: number	2150	1	I	C		Number of average values for the calculation of replacement values		
AS-14	RV status	720	10	T	R		Status for the replacement value		
AS-15	RV mode	2213	1	M	S		Mode of replacement values		
							0x0000	OFF	
							0x0001	ON	(d)
AS-16	Raw data path no.	2124	1	I	F		Raw data: Path selection (0=OFF)		
AS-17	Raw data type	2184	1	M	F		Raw data: Type selection		
							0x0000	TEST	
							0x0001	RAW	(d)
							0x0002	FILTER	
							0x0003	RAW ERR	
							0x0004	FILTER ERR	
							0x0005	FFG	
							0x0006	RAW FFT	
							0x0007	FILTER FFT	
AS-18	Raw data function	2215	1	I	F		Raw data: Trigger function (subselection)		
AS-20	M32 Temperature	5000	2	F	R	→ Units: Temp.	Temperature of the M32 board		

AS-21	Transmit Level	5002	2	F	R	%	Transmission level HV analog board
AS-22	+-5V symmetry	5004	2	F	R	V	Symmetry +-5V, analog board
AS-23	System Tempera-ture	5006	2	F	R	→ Units: Temp.	Temperature, baseboard
AS-24	+-12V symmetry	5008	2	F	R	V	Symmetry +-12V, analog board
AS-25	1V2 voltage	5010	2	F	R	V	Voltage 1V2 DSP board
AS-26	1V5 voltage	5012	2	F	R	V	Voltage 1V5 DSP board
AS-27	3V3 voltage	5014	2	F	R	V	Voltage 3V3 M32 board
AS-28	adc-p binary val.	7502	2	L	R		Pressure input, transmitter value
AS-29	adc-t binary val.	7504	2	L	R		PT100 input, transmitter value
AS-30	max. sys. temp.	1440	2	F	C	→ Units: Temp.	System temperature, max. value
AS-31	time max. sys. temp	2588	2	U	C		Time of max. system temperature
AS-32	min. sys. temp.	1442	2	F	C	→ Units: Temp.	System temperature, min. value
AS-33	time min. sys. temp	2590	2	U	C		Time of min. system temperature

Log Data

Coord.	Value	Reg.	No.	Type	Prot.	Unit	Description		
AT-01	Log-data date	800	10	T	R		Data logger, date of last change		
AT-02	Log-data coordi-nate	810	10	T	R		Data logger, coordinate of last change		
AT-03	Log-data old value	820	10	T	R		Data logger (old value)		
AT-04	Log-data new value	830	10	T	R		Data logger (new value)		
AT-10	Log-data fill level	4007	1	I	R	%	Data logger, fill level		
AT-11	clear par-log	2157	1	M	S		Clear parameter logging list		
							0x0000	NO	(d)
							0x0001	YES	
AT-12	clear event-log	2216	1	M	F		Clear event logging list		
							0x0000	NO	(d)
							0x0001	YES	

Site Information

Coord.	Value	Reg.	No.	Type	Prot.	Unit	Description
AU-01	User Text-1	840	10	T	F		User-programmable text line 1
AU-02	User Text-2	850	10	T	F		User-programmable text line 2
AU-03	User Text-3	860	10	T	F		User-programmable text line 3
AU-04	User Text-4	870	10	T	F		User-programmable text line 4
AU-05	User Text-5	880	10	T	F		User-programmable text line 5

Remote Control

Coord.	Value	Reg.	No.	Type	Prot.	Unit	Description		
AV-01	remote access	10000	1	M	C		Remote access		
							0x0000	NO	(d)
							0x0001	YES	
AV-02	remote keycode	10001	1	I	C		Keyboard code		
AV-03	lcd row 1	10010	10	T	R		Actual line 1 LCD		
AV-04	lcd row 2	10020	10	T	R		Actual line 2 LCD		
AV-05	lcd row 3	10030	10	T	R		Actual line 3 LCD		
AV-06	lcd row 4	10040	10	T	R		Actual line 4 LCD		

AGA-10 Values

Coord.	Value	Reg.	No.	Type	Prot.	Unit	Description
AW-01	SoS calc. status	8000	1	I	R	hex	Status AGA-10 calculation
AW-02	SoS	8001	2	F	R	→ velocity unit	Measured average speed of sound
AW-03	SoS calculated	8003	2	F	R	→ velocity unit	Result speed of sound AGA-10
AW-04	rel. error SoS	8005	2	F	R	%	Relative error measured SoS to SoS calculated
AW-05	abs. error SoS	8007	2	F	R	→ velocity unit	SoS measured - SoS AGA-10
AW-06	temperature	8009	2	F	R	→ Units: Temp.	Temperature: AGA-10 equation
AW-07	pressure	8011	2	F	R	→ Units: Pressure a	Pressure: AGA-10 equation
AW-08	last calculation	8013	2	U	R		Time of last AGA-10 calculation
AW-09	last gas comp.	8015	2	U	R		Time of last gas components input
AW-20	norm. methane	8040	2	F	R	mol-%	Methane: fraction in AGA-10 equation
AW-21	norm. ethane	8046	2	F	R	mol-%	Ethane: fraction in AGA-10 equation
AW-22	norm. propane	8048	2	F	R	mol-%	Propane: fraction in AGA-10 equation
AW-23	norm. iso-butane	8060	2	F	R	mol-%	I-Butane: fraction in AGA-10 equation
AW-24	norm. n-butane	8062	2	F	R	mol-%	N-Butane: fraction in AGA-10 equation
AW-26	norm. iso-pentane	8064	2	F	R	mol-%	I-Pentane: fraction in AGA-10 equation
AW-27	norm. n-pentane	8066	2	F	R	mol-%	N-Pentane: fraction in AGA-10 equation
AW-29	norm. oxygen	8058	2	F	R	mol-%	Oxygen: fraction in AGA-10 equation
AW-30	norm. helium	8078	2	F	R	mol-%	Helium: fraction in AGA-10 equation
AW-31	norm. hydrogen	8054	2	F	R	mol-%	Hydrogen: fraction in AGA-10 equation
AW-32	norm. argon	8080	2	F	R	mol-%	Argon: fraction in AGA-10 equation
AW-33	norm. nitrogen	8042	2	F	R	mol-%	Nitrogen: fraction in AGA-10 equation
AW-34	norm. CO2	8044	2	F	R	mol-%	Carbon dioxide: fraction in AGA-10 equation
AW-35	norm. n-hexane	8068	2	F	R	mol-%	N-Hexane: fraction in AGA-10 equation
AW-36	norm. n-heptane	8070	2	F	R	mol-%	N-Heptane: fraction in AGA-10 equation
AW-37	norm. n-octane	8072	2	F	R	mol-%	N-Octane: fraction in AGA-10 equation

AW-38	norm. n-nonane	8074	2	F	R	mol-%	N-Nonane: fraction in AGA-10 equation
AW-39	norm. n-decane	8076	2	F	R	mol-%	N-Decane: fraction in AGA-10 equation
AW-40	norm. H2S	8052	2	F	R	mol-%	Hydrogen sulfide: fraction in AGA-10 equation
AW-41	norm. water	8050	2	F	R	mol-%	Water: fraction in AGA-10 equation
AW-42	norm. CO	8056	2	F	R	mol-%	Carbon monoxide: fraction in AGA-10 equation

AGA-10 Config

Coord.	Value	Reg.	No.	Type	Prot.	Unit	Description		
AX-01	SoS calc source	8100	1	M	F		Source gas analysis for AGA-10		
							0x0000	OFF	(d)
							0x0001	SET VALUE	
							0x0002	default air	
							0x0003	serial port 2	
AX-02	SoS source temp.	8101	1	M	F		Source temperature for AGA-10		
							0x0000	SoS default	(d)
							0x0001	USE09	
AX-03	SoS source press.	8102	1	M	F		Source pressure for AGA-10		
							0x0000	SoS default	(d)
							0x0001	USE09	
AX-04	SoS temp. default	8104	2	F	F	→ Units: Temp.	Default value temperature for AGA-10		
AX-05	SoS press. default	8106	2	F	F	→ Units: Pressure a	Default value pressure for AGA-10		
AX-06	relative humidity	8108	2	F	F	%	Relative humidity		
AX-07	timeout max.	8110	1	I	F	min	Timeout time for new analysis (except default)		
AX-08	RMGBus mode	8111	1	M	F		Selection 24 or 9 gas components via RMGBus		
							0x0000	RMGBus 24 comp.	(d)
							0x0001	RMGBus	
AX-09	stream number	8112	1	M	F		Selection of the stream with RMGBus		
							0x0000	without indi-cation	(d)
							0x0001	stream 1	
							0x0002	stream 2	
							0x0003	stream 3	
							0x0004	stream 4	
AX-10	Modbus master target	8113	1	M	F		Target for Modbus master		
							0x0000	RMG GC9300	(d)
							0x0001	custom 1	
AX-11	set gas comp.	8350	1	M	F		Set new components		
							0x0000	gas comp. are set	(d)

							0x0001	set new comp.	
AX-20	default methane	8140	2	F	F	mol-%	Methane: default value		
AX-21	default ethane	8142	2	F	F	mol-%	Ethane: default value		
AX-22	default propane	8144	2	F	F	mol-%	Propane: default value		
AX-23	default iso-butane	8146	2	F	F	mol-%	iso-Butane: default value		
AX-24	default n-butane	8148	2	F	F	mol-%	n-Butane: default value		
AX-25	default neo-pentane	8150	2	F	F	mol-%	neo-Pentane: default value		
AX-26	default iso-pentane	8152	2	F	F	mol-%	iso-Pentane: default value		
AX-27	default n-pentane	8154	2	F	F	mol-%	n-Pentane: default value		
AX-28	default hexane+	8156	2	F	F	mol-%	Hexane+: default value		
AX-29	default oxygen	8158	2	F	F	mol-%	Oxygen: default value		
AX-30	default helium	8160	2	F	F	mol-%	Helium: default value		
AX-31	default hydrogen	8162	2	F	F	mol-%	Hydrogen: default value		
AX-32	default argon	8164	2	F	F	mol-%	Argon: default value		
AX-33	default nitrogen	8166	2	F	F	mol-%	Nitrogen: default value		
AX-34	default CO2	8168	2	F	F	mol-%	Carbon dioxide: default value		
AX-35	default n-hexane	8170	2	F	F	mol-%	n-Hexane: default value		
AX-36	default n-heptane	8172	2	F	F	mol-%	n-Heptane: default value		
AX-37	default n-octane	8174	2	F	F	mol-%	n-Octane: default value		
AX-38	default n-nonane	8176	2	F	F	mol-%	n-Nonane: default value		
AX-39	default n-decane	8178	2	F	F	mol-%	n-Decane: default value		
AX-40	default H2S	8180	2	F	F	mol-%	Hydrogen sulfide: default value		
AX-41	default water	8182	2	F	F	mol-%	Water vapour: default value		
AX-42	default CO	8184	2	F	F	mol-%	Carbon monoxide: default value		
AX-43	default ethene	8186	2	F	F	mol-%	Ethene: default value		
AX-44	default propene	8188	2	F	F	mol-%	Propene: default value		
AX-45	sum of def. comp.	8190	2	F	R	mol-%	Sum of default values		
AX-92	MB_Pause	8980	1	I	F	s	Modbus-master pause		
AX-93	MB_Timeout	8981	1	I	F	ms	Modbus-master time outs		
AX-94	MB_Int16Order	8982	10	T	F		Int16 order		
AX-95	MB_Int32Order	8992	10	T	F		Int32 order		
AX-96	MB_FloatOrder	9002	10	T	F		Float32 order		
AX-97	MB_DoubleOrder	9012	10	T	F		Float64 order		

Gas Comp. RMGBus

Coord.	Value	Reg.	No.	Type	Prot.	Unit	Description		
AY-20	methane	8300	2	F	F	mol-%	RMGBus/Modbus value methane		
AY-21	ethane	8302	2	F	F	mol-%	RMGBus/Modbus value ethane		
AY-22	propane	8304	2	F	F	mol-%	RMGBus/Modbus value propane		
AY-23	iso-butane	8306	2	F	F	mol-%	RMGBus/Modbus value iso-butane		
AY-24	n-butane	8308	2	F	F	mol-%	RMGBus/Modbus value n-butane		
AY-25	neo-pentane	8310	2	F	F	mol-%	RMGBus/Modbus value neo-pentane		
AY-26	iso-pentane	8312	2	F	F	mol-%	RMGBus/Modbus value iso-pentane		
AY-27	n-pentane	8314	2	F	F	mol-%	RMGBus/Modbus value n-pentane		
AY-28	hexane+	8316	2	F	F	mol-%	RMGBus/Modbus value hexane+		
AY-29	oxygen	8318	2	F	F	mol-%	RMGBus/Modbus value oxygen		
AY-30	helium	8320	2	F	F	mol-%	RMGBus/Modbus value helium		
AY-31	hydrogen	8322	2	F	F	mol-%	RMGBus/Modbus value hydrogen		
AY-32	argon	8324	2	F	F	mol-%	RMGBus/Modbus value argon		
AY-33	nitrogen	8326	2	F	F	mol-%	RMGBus/Modbus value nitrogen		
AY-34	CO2	8328	2	F	F	mol-%	RMGBus/Modbus value carbon dioxide		
AY-35	n-hexane	8330	2	F	F	mol-%	RMGBus/Modbus value n-hexane		
AY-36	n-heptane	8332	2	F	F	mol-%	RMGBus/Modbus value n-heptane		
AY-37	n-octane	8334	2	F	F	mol-%	RMGBus/Modbus value n-octane		
AY-38	n-nonane	8336	2	F	F	mol-%	RMGBus/Modbus value n-nonane		
AY-39	n-decane	8338	2	F	F	mol-%	RMGBus/Modbus value n-decane		
AY-40	H2S	8340	2	F	F	mol-%	RMGBus/Modbus value hydrogen sulfide		
AY-41	Water	8342	2	F	F	mol-%	RMGBus/Modbus value water vapour		
AY-42	CO	8344	2	F	F	mol-%	RMGBus/Modbus value carbon monox-ide		
AY-43	ethene	8346	2	F	F	mol-%	RMGBus/Modbus value ethene		
AY-44	propene	8348	2	F	F	mol-%	RMGBus/Modbus value propene		
AY-45	sum of gas comp.	8351	2	F	R	mol-%	Sum of components via Modbus/RMG-Bus		
AY-46	telegram counter	8126	1	I	R		Counter for new gas component trans-fers		
AY-47	RMGBus status	8127	1	M	R		Last valid status		
							0x0000	revision	
							0x0001	calibration	
							0x0002	analysis	
							0x0003	revision error	
							0x0004	calibration er-ror	
							0x0005	analysis error	
							0x0006	invalid	
AY-48	RMGBus stream	8128	1	I	R		Stream number of the last telegram		
AY-49	MB timeouts	8129	1	I	R		Number of modbus-master time outs		

AY-50	Modbus errors	8130	1	I	R		Number of Modbus master telegram errors
AY-51	Modbus error reg.	8131	1	I	R		MB register of the last error
AY-52	Modbus error resp.	8132	1	I	R		MB register of the last error
AY-53	MB_NAN_Counter	9022	1	I	R		MB register of the last error
AY-54	MB_SyntaxError	9023	10	T	R		Modbus master syntax error coordinate
AY-55	MB_ErrorBits	9033	2	L	R	hex Int.	Modbus master error bits
AY-56	MB_InStatus	9035	1	I	F		Modbus master status input

Gas Comp. Modbus

Coord.	Value	Reg.	No.	Type	Prot.	Unit	Description
AZ-01	Formula methane	8440	10	T	S		Formula methane
AZ-02	Formula methane	8450	10	T	S		Formula methane
AZ-03	Formula ethane	8460	10	T	S		Formula ethane
AZ-04	Formula ethane	8470	10	T	S		Formula ethane
AZ-05	Formula propane	8480	10	T	S		Formula propane
AZ-06	Formula propane	8490	10	T	S		Formula propane
AZ-07	Formula i-butane	8500	10	T	S		Formula i-butane
AZ-08	Formula i-butane	8510	10	T	S		Formula i-butane
AZ-09	Formula n-butane	8520	10	T	S		Formula n-butane
AZ-10	Formula n-butane	8530	10	T	S		Formula n-butane
AZ-11	Formula neo-pentane	8540	10	T	S		Formula neo-pentane
AZ-12	Formula neo-pentane	8550	10	T	S		Formula neo-pentane
AZ-13	Formula i-pentane	8560	10	T	S		Formula i-pentane
AZ-14	Formula i-pentane	8570	10	T	S		Formula i-pentane
AZ-15	Formula n-pentane	8580	10	T	S		Formula n-pentane
AZ-16	Formula n-pentane	8590	10	T	S		Formula n-pentane
AZ-17	Formula hexane+	8600	10	T	S		Formula hexane
AZ-18	Formula hexane+	8610	10	T	S		Formula hexane
AZ-19	Formula oxygen	8620	10	T	S		Formula oxygen
AZ-20	Formula oxygen	8630	10	T	S		Formula oxygen
AZ-21	Formula helium	8640	10	T	S		Formula helium
AZ-22	Formula helium	8650	10	T	S		Formula helium
AZ-23	Formula hydrogen	8660	10	T	S		Formula hydrogen
AZ-24	Formula hydrogen	8670	10	T	S		Formula hydrogen
AZ-25	Formula argon	8680	10	T	S		Formula argon
AZ-26	Formula argon	8690	10	T	S		Formula argon
AZ-27	Formula nitrogen	8700	10	T	S		Formula nitrogen

AZ-28	Formula nitrogen	8710	10	T	S		Formula nitrogen
AZ-29	Formula CO2	8720	10	T	S		Formula CO2
AZ-30	Formula CO2	8730	10	T	S		Formula CO2
AZ-31	Formula hexane	8740	10	T	S		Formula hexane
AZ-32	Formula hexane	8750	10	T	S		Formula hexane
AZ-33	Formula heptane	8760	10	T	S		Formula heptane
AZ-34	Formula heptane	8770	10	T	S		Formula heptane
AZ-35	Formula octane	8780	10	T	S		Formula octane
AZ-36	Formula octane	8790	10	T	S		Formula octane
AZ-37	Formula nonane	8800	10	T	S		Formula nonane
AZ-38	Formula nonane	8810	10	T	S		Formula nonane
AZ-39	Formula decane	8820	10	T	S		Formula decane
AZ-40	Formula decane	8830	10	T	S		Formula decane
AZ-41	Formula H2S	8840	10	T	S		Formula H2S
AZ-42	Formula H2S	8850	10	T	S		Formula H2S
AZ-43	Formula water	8860	10	T	S		Formula water
AZ-44	Formula water	8870	10	T	S		Formula water
AZ-45	Formula CO	8880	10	T	S		Formula CO
AZ-46	Formula CO	8890	10	T	S		Formula CO
AZ-47	Formula ethene	8900	10	T	S		Formula ethane
AZ-48	Formula ethene	8910	10	T	S		Formula ethane
AZ-49	Formula propene	8920	10	T	S		Formula propene
AZ-50	Formula propene	8930	10	T	S		Formula propene
AZ-51	Formula status	8940	10	T	S		Formula status
AZ-52	Formula status	8950	10	T	S		Formula status
AZ-53	Formula status	8960	10	T	S		Formula status
AZ-54	Formula status	8970	10	T	S		Formula status

DSfG Instance-F

Coord.	Value	Reg.	No.	Type	Prot.	Unit	Description
BA-01	DSfG error	9086	1	I	R		DSfG Error (0000 if no error)
BA-02	vol. flow rate Qm	32768	2	F	R	m3/h	Volume flow (pos. FD1, neg. FD2)
BA-03	Gas velocity	32770	2	F	R	m/s	Velocity of Gas (pos. FD1, neg. FD2)
BA-04	SoS	32772	2	F	R	m/s	Speed of Sound
BA-05	Gas volume sum d.1	32774	2	L	R	→ Unit LF-Volumes	Volume of Gas total Flow direction 1 (V_tot_d1=Vm_d1+Vm_err_d1)
BA-06	Gas volume sum d.2	32776	2	L	R	→ Unit LF-Volumes	Volume of Gas total Flow direction 2 (V_tot_d2=Vm_d2+Vm_err_d2)
BA-07	Gas vol no err d.1	32778	2	L	R	→ Unit LF-Volumes	Volume of Gas undisturbed Flow direction 1 (Vm_d1)
BA-08	Gas vol no err d.2	32780	2	L	R	→ Unit LF-Volumes	Volume of Gas undisturbed Flow direction 2 (Vm_d2)

BA-09	Gas vol error d.1	32782	2	L	R	→ Unit LF-Volumes	Volume of Gas disturbed Flow direction 1 (Vm_err_d1)
BA-10	Gas vol error d.2	32784	2	L	R	→ Unit LF-Volumes	Volume of Gas disturbed Flow direction 2 (Vm_err_d2)
BA-11	Valence	32786	2	L	R		Valency
BA-12	Flow > Qt	32788	2	L	R		Flow bigger Qt (0 = no, unequal 0 = yes)
BA-13	Signal acceptance	32790	2	L	R	%	Signal acceptance
BA-14	Meter error	32792	2	L	R		Meter disturbed (0 = no, unequal 0 = yes)
BA-15	Number of Paths	32794	2	L	R		Number of Paths
BA-16	SoS deviation P1	32796	2	F	R	%	Speed of Sound deviation Path 1 (SoS_1_dev = (SoS_1-SoS)/SoS*100)
BA-17	SoS deviation P2	32798	2	F	R	%	Speed of Sound deviation Path 2 (SoS_2_dev = (SoS_2-SoS)/SoS*100)
BA-18	SoS deviation P3	32800	2	F	R	%	Speed of Sound deviation Path 3 (SoS_3_dev = (SoS_3-SoS)/SoS*100)
BA-19	SoS deviation P4	32802	2	F	R	%	Speed of Sound deviation Path 4 (SoS_4_dev = (SoS_4-SoS)/SoS*100)
BA-20	SoS deviation P5	32804	2	F	R	%	Speed of Sound deviation Path 5 (SoS_5_dev = (SoS_5-SoS)/SoS*100)
BA-21	SoS deviation P6	32806	2	F	R	%	Speed of Sound deviation Path 6 (SoS_6_dev = (SoS_6-SoS)/SoS*100)
BA-22	SoS deviation P7	32808	2	F	R	%	Speed of Sound deviation Path 7 (SoS_7_dev = (SoS_7-SoS)/SoS*100)
BA-23	SoS deviation P8	32810	2	F	R	%	Speed of Sound deviation Path 8 (SoS_8_dev = (SoS_8-SoS)/SoS*100)
BA-24	Path velocity vc1	32896	2	F	R	m/s	Velocity of Gas Path 1
BA-25	SoS P1	32898	2	F	R	m/s	Speed of Sound Path 1
BA-26	Signal acceptance P1	32900	2	F	R	%	Signal acceptance Path 1
BA-27	SNR P1 AB	32902	2	F	R	dB	Signal-Noise-Ratio AB Path 1
BA-28	SNR P1 BA	32904	2	F	R	dB	Signal-Noise-Ratio BA Path 1
BA-29	AGC-level P1 AB	32906	2	F	R	dB	Automatic gain AB Path 1
BA-30	AGC-level P1 BA	32908	2	F	R	dB	Automatic gain BA Path 1
BA-31	Path velocity vc2	32912	2	F	R	m/s	Velocity of Gas path 2
BA-32	SoS P2	32914	2	F	R	m/s	Speed of Sound Path 2
BA-33	Signal acceptance P2	32916	2	F	R	%	Signal acceptance Path 2
BA-34	SNR P2 AB	32918	2	F	R	dB	Signal-Noise-Ratio AB Path 2
BA-35	SNR P2 BA	32920	2	F	R	dB	Signal-Noise-Ratio BA Path 2
BA-36	AGC-level P2 AB	32922	2	F	R	dB	Automatic gain AB Path 2
BA-37	AGC-level P2 BA	32924	2	F	R	dB	Automatic gain BA Path 2
BA-38	Path velocity vc3	32928	2	F	R	m/s	Velocity of Gas path 3
BA-39	SoS P3	32930	2	F	R	m/s	Speed of Sound Path 3
BA-40	Signal acceptance P3	32932	2	F	R	%	Signal acceptance Path 3
BA-41	SNR P3 AB	32934	2	F	R	dB	Signal-Noise-Ratio AB Path 3
BA-42	SNR P3 BA	32936	2	F	R	dB	Signal-Noise-Ratio BA Path 3
BA-43	AGC-level P3 AB	32938	2	F	R	dB	Automatic gain AB Path 3

BA-44	AGC-level P3 BA	32940	2	F	R	dB	Automatic gain BA Path 3
BA-45	Path velocity vc4	32944	2	F	R	m/s	Velocity of Gas path 4
BA-46	SoS P4	32946	2	F	R	m/s	Speed of Sound Path 4
BA-47	Signal acceptance P4	32948	2	F	R	%	Signal acceptance Path 4
BA-48	SNR P4 AB	32950	2	F	R	dB	Signal-Noise-Ratio AB Path 4
BA-49	SNR P4 BA	32952	2	F	R	dB	Signal-Noise-Ratio BA Path 4
BA-50	AGC-level P4 AB	32954	2	F	R	dB	Automatic gain AB Path 4
BA-51	AGC-level P4 BA	32956	2	F	R	dB	Automatic gain BA Path 4
BA-52	Path velocity vc5	32960	2	F	R	m/s	Velocity of Gas path 5
BA-53	SoS P5	32962	2	F	R	m/s	Speed of Sound Path 5
BA-54	Signal acceptance P5	32964	2	F	R	%	Signal acceptance Path 5
BA-55	SNR P5 AB	32966	2	F	R	dB	Signal-Noise-Ratio AB Path 5
BA-56	SNR P5 BA	32968	2	F	R	dB	Signal-Noise-Ratio BA Path 5
BA-57	AGC-level P5 AB	32970	2	F	R	dB	Automatic gain AB Path 5
BA-58	AGC-level P5 BA	32972	2	F	R	dB	Automatic gain BA Path 5
BA-59	Path velocity vc6	32976	2	F	R	m/s	Velocity of Gas path 6
BA-60	SoS P6	32978	2	F	R	m/s	Speed of Sound Path 6
BA-61	Signal acceptance P6	32980	2	F	R	%	Signal acceptance Path 6
BA-62	SNR P6 AB	32982	2	F	R	dB	Signal-Noise-Ratio AB Path 6
BA-63	SNR P6 BA	32984	2	F	R	dB	Signal-Noise-Ratio BA Path 6
BA-64	AGC-level P6 AB	32986	2	F	R	dB	Automatic gain AB Path 6
BA-65	AGC-level P6 BA	32988	2	F	R	dB	Automatic gain BA Path 6
BA-66	Path velocity vc7	32992	2	F	R	m/s	Velocity of Gas path 7
BA-67	SoS P7	32994	2	F	R	m/s	Speed of Sound Path 7
BA-68	Signal acceptance P7	32996	2	F	R	%	Signal acceptance Path 7
BA-69	SNR P7 AB	32998	2	F	R		Signal-Noise-Ratio AB Path 7
BA-70	SNR P7 BA	33000	2	F	R	dB	Signal-Noise-Ratio BA Path 7
BA-71	AGC-level P7 AB	33002	2	F	R	dB	Automatic gain AB Path 7
BA-72	AGC-level P7 BA	33004	2	F	R	dB	Automatic gain BA Path 7
BA-73	Path velocity vc8	33008	2	F	R	m/s	Velocity of Gas path 8
BA-74	SoS P8	33010	2	F	R	m/s	Speed of Sound Path 8
BA-75	Signal acceptance P8	33012	2	F	R	%	Signal acceptance Path 8
BA-76	SNR P8 AB	33014	2	F	R	dB	Signal-Noise-Ratio AB Path 8
BA-77	SNR P8 BA	33016	2	F	R	dB	Signal-Noise-Ratio BA Path 8
BA-78	AGC-level P8 AB	33018	2	F	R	dB	Automatic gain AB Path 8
BA-79	AGC-level P8 BA	33020	2	F	R	dB	Automatic gain BA Path 8

16 USM GT400 Approval

In this section, you will receive information in which fields of application the device is approved. The standards, guidelines and regulations are also listed which are applied for the development and manufacturing.

16.1 Metrological approvals

The device has the following approvals:

- MID approval (DE-14-MI002-PTB002)
- MC type approval (metrological approval of Measurement Canada, AG-0622)

16.2 Pressure devices approval

- PED 2014/68/EU /
  EU-type examination certificate (Module B)
  ISG-22-14-1630
- ASME B31.3 Ed.2012
- CRN

16.3 Electromagnetic compatibility

- FS-1312-249580-001
- FS-1312-249585

16.4 Explosion protection approval

- ATEX (BVS 14 ATEX E 034X)
- IECEx (BVS 14.0029X)
- CSA (NA) C22.2 No 0.-M91, 30-M1986, 142-M1987

16.5 Standards, directives and guidelines

We, RMG Messtechnik GmbH, herewith declare that due to its design and construction in the version brought onto the market the devices described in this operating instruction conforms to the relevant fundamental health and safety requirements of the applicable EC Directive.

In the event of a modification of the device is not authorized by us, this declaration shall be rendered void.

EC guidelines

2014/68/EU	EC Pressure Equipment Directive
2014/30/EU	Electromagnetic Compatibility
2014/34/EU	ATEX Operational Directive.
2014/32/EU	MID - Measuring Instrument Directive.
2011/65/EU	RoHS

Applied harmonized standards

DIN ISO 8434-1 (DIN 2353)	Metallic tube connections.
DIN ISO 17089	Measurement of fluid flow in closed conduits.
DIN EN 334:2009-07	Gas pressure regulators for inlet pressures up to 100 bar
DIN EN 14382	Safety devices for gas pressure regulating stations and installations - Gas safety shut-off devices for inlet pressures up to 100 bar
DIN IEC 60529:A1	IP protection categories.
OIML R137-1&2	1. Metrological and technical requirements. 2. Metrological controls and performance tests.
OIML R137-3	OIML Report format for type evaluation.
DIN EN and IEC/EN 60079-0	Explosive atmospheres

DIN EN and IEC/EN 60079-1	Explosive atmospheres - Part 1: Equipment protection by flame-proof enclosures "d"
DIN EN and IEC/EN 60079-7	Explosive atmospheres - Part 7: Equipment protection by flame-proof enclosures "e"
CAN C22.2 No. 30	Explosion-Proof Enclosures for Use in Class I Hazardous Locations
UL 1203	Explosion-Proof and Dust- Ignition-Proof Electrical Equipment for Use in Hazardous Locations

USA Directives

ASME B31.3 Ed. 2012	Pressure safety
AGA report No. 9	Measurement of Gas by Multipath Ultrasonic Meters.
AGA report No. 10	Speed of Sound in Natural Gas and Other Related Hydrocarbon Gases.

Canada Directives

PS-G-06	Provisional Specifications for the Approval, Verification, Reverification, Installation and Use of Ultrasonic Meters.
G-16	Recognition of Test Data From Gas Meter Test Facilities.
S-EG-05	Specifications for the Approval of Software Controlled Electricity and Gas Metering Devices.
S-G-03	Specifications for Approval of Type of Gas Meters and Auxiliary Devices - Amendments to Measurement Canada Specification LMB-EG-08.
S-EG-06	Specifications Relating to Event Loggers for Electricity and Gas Metering Devices.
GEN-40	Application and Implementation of Measurement Canada's Specifications for the Approval of both Software Controlled Electricity and Gas Meters and Event Loggers.
CRN	Canadian Registration Number

17 USM GT400 Glossary

In this chapter you will be given information on terminology.

Ultrasonic gas meter (USM)

The flow of the gas is measured at different levels with ultrasonic transducers.

Ultrasonic electronics (USE)

The ultrasonic electronics are mounted on the ultrasonic gas meter. The ultrasonic electronics evaluate the data recorded by the sensors. The parameters can be displayed and evaluated on a computer with the USM software.

Plot

Graphic display of one or more measured values.

Meter

In der Software wird der Ultraschallzähler zum Teil als Messwerk bezeichnet.

Device

In the software the ultrasonic gas meter is sometimes called a meter.

Transducer

The transducer or sensor is built into the device. The transducer sends the opposing transducer an ultrasonic signal. Using the time measured for the ultrasonic signal to travel the distance between the two transducers, the ultrasonic electronics calculates the gas flow. 12 transducers are built into the device. They are distributed across three levels with four transducers on every level. Per level two paths measure the gas flow. A path comprises two opposing transducers.

In the manual the transducer is called a sensor.

Sensor

⇨ Transducer

Meter

⇨ Ultrasonic gas meter (USM)

18 USM GT400 Attachment

You will find the declaration of conformity and approvals of the device in this section.

Reliable Measurement of Gas

EU-Declaration of Conformity
EU-Konformitätserklärung

We / *Wir*: **RMG Messtechnik GmbH**
Otto – Hahn – Straße 5
35510 Butzbach
Germany

Declare under our sole responsibility that the product is in conformity with the directives. Product is labeled according to the listed directives and standards and in accordance with the Type-Examination.
Erklären in alleiniger Verantwortung, dass das Produkt konform ist mit den Anforderungen der Richtlinien. Das entsprechend gekennzeichnete Produkt ist nach den aufgeführten Richtlinien und Normen hergestellt und stimmt mit dem Baumuster überein.

Product / *Produkt*: **Ultrasonic Gas Flowmeter type USM-GT-400** / ***Ultraschallgaszähler Typ USM-GT-400***

Harmonisation Legislations *Harmonisierungsrechtsvorschriften*	**EMV**	**ATEX**	**PED**	**MID**
EU- Directives *EU-Richtlinie*	2014/30/EU	2014/34/EU	2014/68/EU	2014/32/EU
Marking *Kennzeichen*	–	Ex II 2G Ex db eb IIB+H_2 T6 Gb	–	–
Normative Documents *Normative Dokumente*	EN 61000-6-3:2007 +A1:2011 EN 61000-6-2:2005	EN IEC 60079-0: 2018 EN 60079-1: 2014 EN IEC 60079-7: 2015 + A1: 2018	AD 2000 – Merkblätter	OIML R 137-1&2 / 2012 OIML D 11 / 2013 Welmec-Guide: 7.2 / 11.1 / 11.3
EC Type-Examination issued by *EG-Baumusterprüfung ausgestellt durch*	Prüfbericht/ Test Report: FS-1312-249580-001 und FS-1312-249585 (Fa. Nemko GmbH)	Modul B BVS 14 ATEX E 034 X DEKRA EXAM Germany	Modul B ISG-22-19-1497_Rev. - C TÜV Hessen Germany	Modul B DE-14-MI002-PTB002 PTB Germany
Approval of a Quality System by *Anerkennung eines Qualitätssicherungssystems durch*	–	Modul D BVS 17 ATEX ZQS/E139 Notified Body: 0158 DEKRA EXAM Germany	Modul D 73 202 2839 Notified Body: 0091 TÜV Hessen Germany	Modul D DE-M-AQ-PTB023 Notified Body: 0102 PTB Germany

RoHS 2011/65/EU

The object of the declaration described above is in conformity with Directive 2011/65/EU of the European Parliament and of the Council of 8 June 2011 on the restriction of the use of certain hazardous substances in electrical and electronic equipment.
Der oben beschriebene Gegenstand der Erklärung erfüllt die Vorschriften der Richtlinie 2011/65/EU des Europäischen Parlaments und des Rates vom 8. Juni 2011 zur Beschränkung der Verwendung bestimmter gefährlicher Stoffe in Elektro- und Elektronikgeräten.

RMG Messtechnik GmbH
Butzbach, den 14.10.2020

Thorsten Dietz, Managing Director

i.A. Sascha Körner, Technical Manager

Sitz der Gesellschaft Butzbach • Registergericht Friedberg HRB 2535
Geschäftsführung Barbara Baumann, Thorsten Dietz
Qualitätsmanagement DIN EN ISO 9001:2015

Seite 1 von 1

Nemko GmbH & Co. KG
Prüf- und Zertifizierungsstelle
Test and Certification Institute
Reetzstraße 58
D-76327 Pfinztal
Tel.: +49 (0) 72 40 / 63 -0
Fax: +49 (0) 72 40 / 63 -11

ilac-MRA DAkkS Deutsche Akkreditierungsstelle D-PL-18175-01-01 Nemko EMV Testzentrum

PRÜFBERICHT - *TEST REPORT*

Elektromagnetische Verträglichkeit (EMV) - ***Electromagnetic Compatibility (EMC)***

ANTRAGSTELLER - *APPLICANT*

Firma - *Company:*	**RMG Messtechnik GmbH**
Anschrift - *Address:*	**Otto-Hahn-Str. 5** **D - 35510 Butzbach**
Anwesende - *Witness(es):*	**Hr. Schmitt, Hr. Henning**

PRÜFLING (EUT) - *EQUIPMENT UNDER TEST*

Gerätebez. - *Equipment:*	**Ultraschallgaszähler** - ***Ultrasonic Flowmeter***
Modell/Typ - *Model/Type:*	**USM-GT-400**
Fertigungs Nr. - *Serial No.:*	**Zähler: # 13, (Bj. 2013, DN 150, Q: 20 - 2400 m^3/h)**

PRÜFUNG - *TEST*

Anlieferung *Arrival of EUT:*	**03.01.2014**	
Meßtermin(e) *Date of measurement:*	**07. - 09.01.2014**	
Prüfungsgrundlage *Standards:*	***Störaussendung - Emission:*** **EN 61000-6-3:2007+A1:2011** **Klasse B** - *class B*	***Störfestigkeit - Immunity:*** **EN 61000-6-2:2005**
Ergebnisse - *Results:*	**Anforderungen erfüllt** - ***Passed*** **Details siehe Zusammenfassung** - ***Details see test result summary***	
Bemerkungen - *Remarks:*	**Höherer Prüfschärfegrad gem. OIML R 137-1&2: 2012 berücksichtigt** ***Higher perfomance criteria OIML R 137-1&2: Ed. 2012 was considered.***	
Bemerkungen - *Remarks:*	**Ein Prüfplan wurde vorgelegt.** ***The test plan was presented.***	
Durchführung - *Performed by:*	**Dipl.-Ing. Th. W. Stein, Dipl.-Ing. M. Korny**	

PRÜFBERICHT - *TEST REPORT*

Identifikationsnummer *Identification No.:*	**FS-1312-249585**	
Datum des Prüfberichts *Date of Report:*	**20.01.2014**	
bearbeitet von - *Provided by:*	**Dipl.-Ing. Th. W. Stein**	
	Prüfer - *Person responsible*	**Unterschrift** - *Signature*
überprüft von - *Approved by:*	**Dipl.-Ing. P. Lukas**	
	Prüfer - *Person responsible*	**Unterschrift** - *Signature*

QMV-5.10-2 d-e / Rev 6.03

Dieser Prüfbericht besteht inkl. diesem Deckblatt aus 58 numerierten Seiten und darf ohne schriftliche Genehmigung des Prüflabors nicht auszugsweise vervielfältigt werden. Die Prüfergebnisse beziehen sich ausschließlich auf den oben aufgeführten Prüfling (Typ-Prüfung). Rechtsgültigkeit besitzt nur das handschriftlich unterschriebene Original.
This report consists of 58 numbered pages including this page and shall not be reproduced except in full, without the written approval of the testing laboratory. The results are related to the equipment under test only (type-test) The English version is a translation. In case of doubt you should follow the original German text. Legal validity is given by the handwritten signed document only.

Nemko GmbH & Co. KG
Prüf- und Zertifizierungsstelle
Test and Certification Institute
Reetzstraße 58
D-76327 Pfinztal
Tel.: +49 (0) 72 40 / 63 -0
Fax: +49 (0) 72 40 / 63 -11

ilac-MRA DAkkS Deutsche Akkreditierungsstelle D-PL-18175-01-01 Nemko EMV Testzentrum

PRÜFBERICHT - *TEST REPORT*

Elektromagnetische Verträglichkeit (EMV) - *Electromagnetic Compatibility (EMC)*

ANTRAGSTELLER - *APPLICANT*

Firma - *Company:*	**RMG Messtechnik GmbH**
Anschrift - *Address:*	**Otto-Hahn-Str. 5** **D - 35510 Butzbach**
Anwesende - *Witness(es):*	**Hr. Schmitt, Hr. Henning**

PRÜFLING (EUT) - *EQUIPMENT UNDER TEST*

Gerätebez. - *Equipment:*	**Ultraschallgaszähler** - ***Ultrasonic Flowmeter***
Modell/Typ - *Model/Type:*	**USM-GT-400**
Fertigungs Nr. - *Serial No.:*	**Zähler: # 15, (Bj. 2013, DN 200, Q: 32 - 4200 m^3/h)**

PRÜFUNG - *TEST*

Anlieferung - *Arrival of EUT:*	**03.01.2014**
Meßtermin(e) *Date of measurement:*	**09.; 10.; 13.01.2014**
Prüfungsgrundlage *Standards:*	***Störaussendung - Emission:*** **EN 61000-6-3:2007+A1:2011** **Klasse B** - ***class B*** ***Störfestigkeit - Immunity:*** **EN 61000-6-2:2005**
Ergebnisse - *Results:*	**Anforderungen erfüllt** - ***Passed*** **Details siehe Zusammenfassung** - ***Details see test result summary***
Bemerkungen - *Remarks:*	**Höherer Prüfschärfegrad gem. OIML R 137-1&2: 2012 berücksichtigt** ***Higher perfomance criteria OIML R 137-1&2: Ed. 2012 was considered.***
Bemerkungen - *Remarks:*	**Ein Prüfplan wurde vorgelegt.** ***The test plan was presented.***
Bemerkungen - *Remarks:*	**Ersatz für Prüfbericht FS-1312-249580 vom 16.01.2014.** ***Replacement for test report FS-1312-249580 dated 2014-01-16.***
Durchführung - *Performed by:*	**Dipl.-Ing. J. Szipanski**

PRÜFBERICHT - *TEST REPORT*

Identifikationsnummer *Identification No.:*	**FS-1312-249580-001**	
Datum des Prüfberichts *Date of Report:*	**24.02.2014**	
bearbeitet von - *Provided by:*	**Dipl.-Ing. J. Szipanski** **Prüfer** - *Person responsible*	 **Unterschrift** - *Signature*
überprüft von - *Approved by:*	**Dipl.-Ing. P. Lukas** **Prüfer** - *Person responsible*	 **Unterschrift** - *Signature*

QMV-5.10-2 d-e / Rev 6.03

Dieser Prüfbericht besteht inkl. diesem Deckblatt aus 53 numerierten Seiten und darf ohne schriftliche Genehmigung des Prüflabors nicht auszugsweise vervielfältigt werden. Die Prüfergebnisse beziehen sich ausschließlich auf den oben aufgeführten Prüfling (Typ-Prüfung). Rechtsgültigkeit besitzt nur das handschriftlich unterschriebene Original.
This report consists of 53 numbered pages including this page and shall not be reproduced except in full, without the written approval of the testing laboratory. The results are related to the equipment under test only (type-test) The English version is a translation. In case of doubt you should follow the original German text. Legal validity is given by the handwritten signed document only.

Translation

(1) EC-Type Examination Certificate

(2) Equipment and protective systems intended for use in potentially explosive atmospheres - Directive 94/9/EC

(3) No. of EC-Type Examination Certificate: **BVS 14 ATEX E 034 X**

(4) Equipment: **Ultrasonic meter type USM-GT-400**

(5) Manufacturer: **RMG Messtechnik GmbH**

(6) Address: **Otto-Hahn-Straße 5, 35510 Butzbach, Germany**

(7) The design and construction of this equipment and any acceptable variation thereto are specified in the appendix to this type examination certificate.

(8) The certification body of DEKRA EXAM GmbH, notified body no. 0158 in accordance with Article 9 of the Directive 94/9/EC of the European Parliament and the Council of 23 March 1994, certifies that this equipment has been found to comply with the Essential Health and Safety Requirements relating to the design and construction of equipment and protective systems intended for use in potentially explosive atmospheres, given in Annex II to the Directive. The examination and test results are recorded in the test and assessment report BVS PP 14.2061 EG.

(9) The Essential Health and Safety Requirements are assured by compliance with:

EN 60079-0:2012 **General requirements**
EN 60079-1:2007 **Flameproof enclosure "d"**
EN 60079-7:2007 **Increased Safety "e"**

(10) If the sign "X" is placed after the certificate number, it indicates that the equipment is subject to special conditions for safe use specified in the appendix to this certificate.

(11) This EC-Type Examination Certificate relates only to the design, examination and tests of the specified equipment in accordance to Directive 94/9/EC.
Further requirements of the Directive apply to the manufacturing process and supply of this equipment. These are not covered by this certificate.

(12) The marking of the equipment shall include the following:

Ex **II 2G Ex de IIB+H_2 T6 Gb**

DEKRA EXAM GmbH
Bochum, dated 2014-03-17

Signed: Simanski
Certification body

Signed: Leiendecker
Special services unit

This certificate may only be reproduced in its entirety and without change.
DEKRA EXAM GmbH Dinnendahlstrasse 9 44809 Bochum Germany Phone +49.234.3696-105 Fax +49.234.3696-110 zs-exam@dekra.com

(13) Appendix to

(14) **EC-Type Examination Certificate**
BVS 14 ATEX E 034 X

(15) 15.1 Subject and type
Ultra sonic meter type USM-GT-400

15.2 Description
The Ultrasonic gas flow meter type USM-GT-400 serves to measure the quantity of gas.It consists of a metallic meter body with an electronics unit installed on the top. A number of ultrasonic transducers (max. 16) is installed inside the meter body. Each pair of ultrasonic transducers build an acoustic path. The electronic unit is used to generate, detect and analyze ultrasonic pulses.

The enclosure type 8265/53-... (size 3) in type of protection Flameproof Enclosure "d" is used to house the electronics. It is a product of company R.STAHL Schaltgeräte GmbH and is separately certified (PTB 06 ATEX 1023 U resp. IECEx PTB 07.0027 U). The connection between the ultrasonic transducers and the electronics are realized with coaxial cables which are individually laid in stainless steel tubes leading into the electronics enclosure via a multiple-tubule feed through. The electronics enclosure together with the pipes and the transducer form one flameproof unit.
The control and distribution box type 8125/5...-..., product of company R.STAHL Schaltgeräte GmbH, which is separately certified in type of protection Increased Safety "e", is used as junction box (PTB 01 ATEX 1001 resp. IECEx PTB 06.0079).
The control and distribution box is equipped with separately certified terminal blocks.
A separately certified conductor bushing is used between the enclosure in type of protection "d" and control and distribution box in type of protection "e".

15.3 Parameters

15.3.1	Electrical data		
15.3.1.1	Electronics in the „d"-enclosure		
	supply voltage	DC 24	V
	power dissipation	max. 12	W
15.3.1.2	Transducer		
15.3.1.2.1	Types TNG 10-CP, TNG 10-CHP		
	max. pulse input voltage	± 200	V
	pulse length	10	µs
	ultrasonic frequency	100	kHz
15.3.1.2.2	Types TNG 20-SP, TNG 20-LP, TNG 20-LHP and TNG 20-SHP		
	Max. pulse input voltage	± 200	V
	pulse length	5	µs
	ultrasonic frequency	200	kHz
15.3.2	Thermal data		
	temperature class T6 at		
	permitted ambient temperature range of -40 °C ≤ T_{amb} ≤ +55 °C		

(16) Test and assessment report
BVS PP 14.2061 EG as of 2014-03-17

(17) Special conditions for safe use

17.1 Since the transducers are made of titanium, suitable measures must be taken to prevent impact or friction sparcs.

17.2 Some of the dimensions of the flameproof joints of this equipment exceed the permissible minimum values or go below the permissible maximum values which are given by EN 60079-1:2007. For information concerning these dimensions contact the manufacturer.

We confirm the correctness of the translation from the German original.
In the case of arbitration only the German wording shall be valid and binding.

DEKRA EXAM GmbH
44809 Bochum, 2014-03-17
BVS-Hk/Sch A 20130972

Certification body

Special services unit

This certificate may only be reproduced in its entirety and without change.
DEKRA EXAM GmbH Dinnendahlstrasse 9 44809 Bochum Germany Phone +49.234.3696-105 Fax +49.234.3696-110 zs-exam@dekra.com

IECEx Certificate of Conformity

INTERNATIONAL ELECTROTECHNICAL COMMISSION
IEC Certification System for Explosive Atmospheres
for rules and details of the IECEx Scheme visit www.iecex.com

Certificate No.:	**IECEx BVS 14.0029X**	Page 1 of 5	Certificate history: Issue 0 (2014-03-25)
Status:	**Current**	Issue No: 1	
Date of Issue:	2020-06-23		
Applicant:	**RMG Messtechnik GmbH** Otto-Hahn-Straße 5 35510 Butzbach **Germany**		
Equipment:	**Ultrasonic meter type USM-GT-400**		
Optional accessory:			
Type of Protection:	**Flameproof Enclosures "d", Increased Safety "e"**		
Marking:	Ex db eb IIB+H_2 T6 Gb		

Approved for issue on behalf of the IECEx Certification Body: **Jörg Koch**

Position: **Head of Certification Body**

Signature: (for printed version)

Date: 23.6.20

1. This certificate and schedule may only be reproduced in full.
2. This certificate is not transferable and remains the property of the issuing body.
3. The Status and authenticity of this certificate may be verified by visiting www.iecex.com or use of this QR Code.

Certificate issued by:

DEKRA Testing and Certification GmbH
Certification Body
Dinnendahlstrasse 9
44809 Bochum
Germany

DEKRA
On the safe side.

TÜV Technische Überwachung Hessen GmbH
Industrie Service
Hans – Böckler – Straße 4 35440 Linden
Telefon: 06403 / 9008 – 0 Fax: 06403 / 9008 - 20

ZERTIFIKAT

(EU–BAUMUSTERPRÜFBESCHEINIGUNG FÜR BAUMUSTER)

(EU-type examination certificate – production type)

EU-Baumusterprüfung (Modul B für Baumuster) nach Richtlinie 2014/68/EU

EU-type examination (Module B - production type) according to directive 2014/68/EU

Zertifikat – Nr.: ISG-22-19-1497_Rev. C

Name und Anschrift des Herstellers: Name and postal address of the manufacturer:	**RMG Messtechnik GmbH** **Otto-Hahn-Strasse 5** **D-35510 Butzbach**

Hiermit wird bestätigt, dass das unten genannte Baumuster die Anforderungen der Richtlinie 2014/68/EU erfüllt.
We herewith certify that the type mentioned below meets the requirements of the directive 2014/68/EU.

Prüfbericht – Nr.: Test report No.:	siehe Beiblätter zu/ *see attached sheet:* ISG-22-19-1497_Rev. C
Bezeichnung: Designation:	Ultraschallgaszähler USZ08 / USM-GT-400 DN80, DN100, DN150, DN200, DN250, DN300, DN350, DN400, DN500, DN600, DN800, DN900
Geltungsbereich: Scope of examination:	**Ultraschallgaszähler Typ: USZ08-6P / USM-GT-400** siehe Beiblätter zu/ *see attached sheet to:* ISG-22-19-1497_Rev. C
Prüfobjekt: Inspection item:	druckhalt. Ausrüstungsteil (pressure accessory)
Kategorie: Category:	I - IV
Fertigungsstätte: Manufacturing plant:	Otto-Hahn-Str. 5, D-35510 Butzbach
Gültig bis: Valid:	**siehe Beiblätter zu/ see attached sheets to: ISG-22-19-1497_Rev. C**
Bemerkungen / Hinweise: Remarks / hints:	**Das Zertifikat ISG-22-19-1497_Rev. B vom 12.05.2020 ist hiermit ersetzt und verliert seine Gültigkeit!**

Anlagen: documents: siehe Beiblatt zu/ *see attached sheet to:* ISG-22-19-1497_Rev. C

TÜV Technische Überwachung Hessen GmbH
Notified body, No.: 0091

TÜV Hessen Notifizierte 0091 Stelle Industrie Service

Linden, 14.10.2020
place, date

Zertifizierer: ☐ Bültesheim ☒ Dietrich ☐ Kuhlbörsch ☐ S. Droß

Umseitige Hinweise beachten / see hints overleaf

ISG_22_19_1497_REV-C__RMG_B+B_USZ +USM GT-400_DN100-DN900.Docx

CSA Group

Certificate of Compliance

Certificate: 2156089 **Master Contract:** 261288

Project: 70019644 **Date Issued:** February 24, 2015

Issued to: **RMG Messtechnik Gmbh**
Otto-Hahn-Straße 5
Butzbach, 35510
Germany
Attention: Ralf Both

The products listed below are eligible to bear the CSA Mark shown with adjacent indicators 'C' and 'US' for Canada and US or with adjacent indicator 'US' for US only or without either indicator for Canada only

C US

Issued by: James May
James May

PRODUCTS

CLASS – 2258 02 – PROCESS CONTROL EQUIPMENT – For Hazardous Locations
CLASS – 2258 82 – PROCESS CONTROL EQUIPMENT – For Hazardous Locations – Certified to US Standards

Class I, Division 1, Groups B, C and D:

Ultrasonic Flowmeter Model USM-GT-400 with transducers TNG 10-CP, 20-SP and 20-LP (Operating pressure ≤ 150 bar / 2175 psi) or 10-CHP, 20-SHP and 20-LHP (Operating pressure ≤ 300 bar / 4351 psi). Sizes DN80 (3") to DN1000 (40"). Input rated 24Vdc max, 0.5A, 12.0W, Class-2 circuits only; -40ºC to +40/55 ambient, temperature code rating T6/T5. Process temperature ≤ 80ºC.

Conditions of Acceptability

i. For Canadian installation, to reduce the risk of ignition of hazardous atmospheres, conduit must be sealed at the enclosure.
ii. For US installation, to reduce the risk of ignition of hazardous atmospheres, conduit runs must have a sealing fitting connected within 18 inches of the enclosure.

DQD 507 Rev. 2012-05-22 Page 1

Certificate: 2156089 **Master Contract:** 261288
Project: 70019644 **Date Issued:** February 24, 2015

APPLICABLE REQUIREMENTS

CAN/CSA-C22.2 No. 0-M91	-	General Requirements – Canadian Electrical Code, Part II
CSA C22.2 No. 30-M1986	-	Explosion-Proof Enclosures for Use in Class I Hazardous Locations
CSA C22.2 No. 142-M1987	-	Process Control Equipment
UL 916 (4th Ed.) December 2007	-	Energy Management Equipment
UL 1203 (4th Ed.) September 2006	-	Explosion-Proof and Dust-Ignition-Proof Electrical Equipment for Use in Hazardous (Classified) Locations

DQD 507 Rev. 2012-05-22 Page 2

Physikalisch-Technische Bundesanstalt
Nationales Metrologieinstitut

KBS
Konformitätsbewertungsstelle

EU-Baumusterprüfbescheinigung

EU Type-examination Certificate

Ausgestellt für: *Issued to:*	RMG Messtechnik GmbH Otto-Hahn-Str. 5 35510 Butzbach
gemäß: *In accordance with:*	Anhang II Modul B der Richtlinie 2014/32/EU des Europäischen Parlaments und des Rates vom 26. Februar 2014 zur Harmonisierung der Rechtsvorschriften der Mitgliedstaaten über die Bereitstellung von Messgeräten auf dem Markt. *Annex II Module B of the Directive 2014/32/EU of the European Parliament and of the Council of 26 February 2014 on the harmonisation of the laws of the Member States relating to the making available on the market of measuring instruments.*
Geräteart: *Type of instrument:*	Gaszähler *Gas meter*
Typbezeichnung: *Type designation:*	USM GT400
Nr. der Bescheinigung: *Certificate No.:*	DE-14-MI002-PTB002, Revision 5
Gültig bis: *Valid until:*	11.02.2028
Anzahl der Seiten: *Number of pages:*	29
Geschäftszeichen: *Reference No.:*	PTB-1.42-4092296
Notifizierte Stelle: *Notified Body:*	0102

Zertifizierung:
Certification:
Im Auftrag
On behalf of PTB
Dr. Rainer Kramer

Braunschweig, 04.09.2018
Siegel
Seal

Bewertung:
Evaluation:
Im Auftrag
On behalf of PTB
Dr. Roland Schmidt

R3-072097

TÜV PROFI CERT

CERTIFICATE

Management system as per

Pressure Equipment Directive 2014/68/EU Module D

Evidence of conformity with the above standard(s) has been furnished
and is certified in accordance with TÜV PROFICERT procedures for

RMG

RMG Messtechnik GmbH
Otto-Hahn-Straße 5
D-35510 Butzbach
GERMANY
scope:

Production of gas meters and
associated items of equipment

Certificate registration No. **73 202 2839** Certificate valid from 2018-07-16 to **2021-07-15**

Audit report No. 4331 6307

ZLS
ZLS-NB-0223

TÜV HESSEN

PTB
Physikalisch-Technische Bundesanstalt
Nationales Metrologieinstitut

KBS
Konformitätsbewertungsstelle

Zertifikat
Certificate

über die Anerkennung eines Qualitätssicherungssystems

on the approval of a quality system

Ausgestellt für: *Issued to:*	RMG MESSTECHNIK GmbH Otto-Hahn-Str. 5 35510 Butzbach
gemäß: *In accordance with:*	Mess- und Eichverordnung vom 11. Dezember 2014 (MessEV) *Measures and Verification Ordinance dated 11 December 2014 (MessEV)* in Verbindung mit *in connection with* - Richtlinie **2014/32/EU** vom 26. Februar 2014 (MID) *- Directive **2014/32/EU** of 26 February 2014 (MID)*
Messgröße lt. MessEV § 1: *Measurand acc. to Measures and Verification Ordinance, section 1:*	Volumen *Volume* Sonstige Messgrößen bei der Lieferung von strömenden Flüssigkeiten oder strömenden Gasen *Other measurands in the supply of flowing liquids or flowing gases*
Nr. des Zertifikats: *Certificate No.:*	DE-M-AQ-PTB023, Revision 2
Gültig bis: *Valid until:*	08.02.2021
Anzahl der Seiten: *Number of pages:*	5
Geschäftszeichen: *Reference No.:*	PTB-9.22-4089350
Nr. der Stelle: *Body No.:*	0102

Im Auftrag
On behalf of PTB

Markus Urner

Braunschweig, 09.02.2018

Siegel
Seal

PHYSIKALISCH-TECHNISCHE BUNDESANSTALT

R3-027579

Physikalisch-Technische Bundesanstalt
Nationales Metrologieinstitut

KBS
Konformitätsbewertungsstelle

Seite 2 des QS-Anerkennungszertifikats Nr. DE-M-AQ-PTB023, Revision 2 vom 09.02.2018
Page 2 of the QS Approval Certificate No. DE-M-AQ-PTB023, Revision 2 dated 09.02.2018

Zertifikatsgeschichte
History of the Certificate

Zertifikats-Ausgabe *Issue of the Certificate*	**Datum** *Date*	**Änderungen** *Modifications*
DE-09-AQ-PTB023MID	09.02.2009	Erstbescheinigung *Initial certificate*
DE-09-AQ-PTB023, Revision 01	01.10.2009	1. Revision, Erweiterung des Geltungsbereichs um Gaszähler *Extension of the scope to Gas Meter*
DE-12-AQ-PTB023	09.02.2012	1. Reanerkennung, Verlängerung der Gültigkeit um 3 Jahre *1st reapproval, prolongation for another 3 years*
DE-M-AQ-PTB023	09.02.2015	2. Reanerkennung nach MID und Erweiterung des Geltungsbereichs nach Anhang 4 Modul D der Mess- und Eichverordnung *2nd reapproval according to MID and extension of the scope according to Annex 4 Module D of the Measures and Verification Ordinance*
DE-M-AQ-PTB023, Revision 1	12.06.2017	1. Revision, Erweiterung mit dem Standort-Aldingen *Extension of the scope to location Aldingen*
DE-M-AQ-PTB023, Revision 2	09.02.2018	3. Reanerkennung, Verlängerung der Gültigkeit um 3 Jahre *3rd reapproval, prolongation for another 3 years*

Diese Revision 2 ersetzt Zertifikat Nr. DE-M-AQ-PTB023 vom 12.06.2017, Geschäftszeichen PTB-Q.32-4085287.
This Revision 2 replaces Certificate No. DE-M-AQ-PTB023 dated 12.06.2017, Reference No. PTB-Q.32-4085287

Physikalisch-Technische Bundesanstalt
Nationales Metrologieinstitut

KBS
Konformitätsbewertungsstelle

Seite 3 des QS-Anerkennungszertifikats Nr. DE-M-AQ-PTB023, Revision 2
Page 3 of the QS Approval Certificate No. DE-M-AQ-PTB023, Revision 2

vom 09.02.2018
dated 09.02.2018

Vorbemerkungen

Preliminary remarks

Die Konformitätsbewertungsstelle der Physikalisch-Technischen Bundesanstalt (PTB) bescheinigt mit diesem Zertifikat, dass das Qualitätssicherungssystem in dem in diesem Zertifikat genannten Geltungsbereich den folgenden Anforderungen entspricht:

By means of this certificate, the Conformity Assessment Body of the Physikalisch-Technische Bundesanstalt (PTB) certifies that the Quality System complies - within the scope of validity specified in this Certificate - with the following requirements:

- Anlage 4 **Modul D der Mess- und Eichverordnung** vom 11.12.2014 (BGBl. I S. 2010), zuletzt geändert durch Artikel 1 der Verordnung vom 10.08.2017 (BGBl. I S. 3098), Absätze 3.2 und 3.3
  *Annex 4 **Module D of the Measures and Verification Ordinance** dated 11.12.2014 (Federal Law Gazette I, p. 2010), last amended by article 1 of the Ordinance of 10.08.2017 (BGBl. I p. 3098), sections 3.2 and 3.3*
- Anhang II **Modul D der Richtlinie 2014/32/EU** des Europäischen Parlaments und des Rates vom 26. Februar 2014 zur Harmonisierung der Rechtsvorschriften der Mitgliedstaaten über die Bereitstellung von Messgeräten auf dem Markt (ABl L 96 S. 149), zuletzt geändert durch Berichtigung vom 20.01.2016 (ABl L 13 S. 57), Abs. 3.2.
  *Annex II **Module D of Directive 2014/32/EU** of the European Parliament and of the Council of 26 February 2014 on the harmonisation of the laws of the Member States relating to the making available on the market of measuring instruments (OJ L 96 p. 149),), last amended by Corrigendum of 20.01.2016 (OJ L 13 p. 57) para. 3.2.*

Der Zertifikatsinhaber ist berechtigt, die Kennzeichnung für die im Geltungsbereich dieses anerkannten Qualitätssicherungssystems gefertigten Messgeräte mit der PTB-Kennnummer 0102 zu versehen. Die Bewertung basiert auf einer Begutachtung der eingereichten Dokumente und einem Audit im Unternehmen. Das Qualitätssicherungssystem unterliegt der laufenden Überwachung der Konformitätsbewertungsstelle.

The owner of this certificate is entitled to provide the marking of the measuring instruments which have been produced within the scope of validity of this approved Quality System with the PTB identification number 0102. The assessment is based on an evaluation of the submitted documents and on an audit on site. The quality system is subject to permanent surveillance by the Conformity Assessment Body.

Physikalisch-Technische Bundesanstalt
Nationales Metrologieinstitut

KBS
Konformitätsbewertungsstelle

Seite 4 des QS-Anerkennungszertifikats Nr. DE-M-AQ-PTB023, Revision 2 vom 09.02.2018
Page 4 of the QS Approval Certificate No. DE-M-AQ-PTB023, Revision 2 dated 09.02.2018

Standorte und Gerätearten

Sites and kinds of instruments

Standort 1:
Site 1:

RMG Messtechnik GmbH
Otto-Hahn-Str. 5
35510 Butzbach
DEUTSCHLAND

Messgerätearten:
Kinds of measuring instruments:

EU-Gaszähler
EU gas meters

EU-Gasmengenumwerter (TG)
EU volume conversion devices for gas (sub-assembly)

ZE: getrennt und integriert angeordnete Zusatzeinrichtungen für Gaszähler oder Mengenumwerter
Additional device: Additional devices for gas meters or volume conversion devices arranged separately and in an integrated way

ZE: Gebergeräte für Zählwerkstände
Additional device: Transmitter units for meter reading

Brennwertmessgeräte
Calorific value determination devices

Gasbeschaffenheitsmessgeräte
Devices to determine the gas quality

ZE: Schnittstellenwandler
Additional device: Interface converter

Physikalisch-Technische Bundesanstalt
Nationales Metrologieinstitut

KBS
Konformitätsbewertungsstelle

Seite 5 des QS-Anerkennungszertifikats Nr. DE-M-AQ-PTB023, Revision 2 vom 09.02.2018
Page 5 of the QS Approval Certificate No. DE-M-AQ-PTB023, Revision 2 dated 09.02.2018

Standort 2:
Site 2:

RMG Messtechnik GmbH
Heinrich-Lanz-Str. 9
67259 Beindersheim
DEUTSCHLAND

Messgerätearten:
Kinds of measuring instruments:

EU-Gasmengenumwerter (TG)
EU volume conversion devices for gas (sub-assembly)

ZE: Dichte-Mengenumwerter
Additional device: Density conversion device

ZE: getrennt und integriert angeordnete Zusatzeinrichtungen für Gaszähler oder Mengenumwerter
Additional device: Additional devices for gas meters or volume conversion devices arranged separately and in an integrated way

ZE: Brennwert-Mengenumwerter
Additional device: Energy conversion device

ZE: Langzeitspeicher
Additional device: Long-term storage

Die Konformitätsbewertungsstelle führt eine Liste der von diesem Zertifikat abgedeckten Messgerätetypen. Die Liste wird laufend aktualisiert und dem Inhaber des Zertifikats zugeschickt.
The Conformity Assessment Body maintains a list of the measuring instrument types covered by this Certificate. This list will be kept up to date and sent to the owner of the Certificate.

1

Production Quality Assurance Notification

2 Equipment and Protective Systems intended for use in potentially explosive atmospheres
Directive 2014/34/EU
Annex IV - Module D: Conformity to type based on quality assurance of the production process
Annex VII - Module E: Conformity to type based on product quality assurance

3 Notification number: **BVS 20 ATEX ZQS/E139**

4 Product category: **Equipment and components equipment-group II, category 2G: Manufacturing and sale of Volume Meters, Electronic Correctors and Gas Analysers, Electrical equipment and devices**

ONE STEP AHEAD

5 Manufacturer: **RMG Messtechnik GmbH**

6 Address: **Otto-Hahn-Strasse 5, 35510 Butzbach, Germany**

Site(s) of manufacture: **RMG Messtechnik GmbH, Otto-Hahn-Strasse 5, 35510 Butzbach, Germany**
RMG Messtechnik GmbH, Heinrich-Lanz-Strasse 9, 67259 Beindersheim, Germany

7 The certification body of DEKRA Testing and Certification GmbH, Notified Body No 0158 in accordance with Article 17 of the Council Directive 2014/34/EU of 26 February 2014 notifies that the manufacturer has a production quality system, which complies with Annex IV of the Directive.
This quality system in compliance with Annex IV of the Directive also meets the requirements of Annex VII.
In the updated annex all products covered by this notification and their type examination certificate numbers are listed.

8 This notification is based on audit report ZQS/E139/20 issued 2020-11-20.
Results of periodical re-assessments of the quality system are a part of this notification.

9 This notification is valid from 2020-10-28 until 2023-10-28 and can be withdrawn if the manufacturer does not satisfy the production quality assurance surveillance according to Annex IV and VII.

10 According to Article 16 (3) of the Directive 2014/34/EU the CE marking shall be followed by the identification number 0158 of DEKRA Testing and Certification GmbH as notified body involved in the production control phase.

DEKRA Testing and Certification GmbH
Bochum, 2020-11-20

Managing Director

This is a translation from the German original.
In the case of arbitration only the German wording shall be valid and binding.

Page 1 of 1 - Jobnumber 342009000
This notification may only be reproduced in its entirety and without any change.
DEKRA Testing and Certification GmbH, Handwerkstr. 15, 70565 Stuttgart, Germany
Certification body: Dinnendahlstr. 9, 44809 Bochum, Germany
Phone +49.234.3696-400, Fax +49.234.3696-401, e-mail DTC-Certification-body@dekra.com

RMG Messtechnik GmbH
Otto-Hahn-Straße 5
35510 Butzbach, Deutschland
Tel: +49 (0) 6033 897 – 0
Fax: +49 (0) 6033 897 – 130

RMG 中国地区代理商

珠海司福斯特科技有限公司

www.safedtech.com

4001642016

联系人：刘 先生 18688194199