TECHNICAL MANUAL

SEARCHLINE EXCEL™ PLUS
SEARCHLINE EXCEL™ EDGE

Open Path Flammable Hydrocarbon Gas Detector

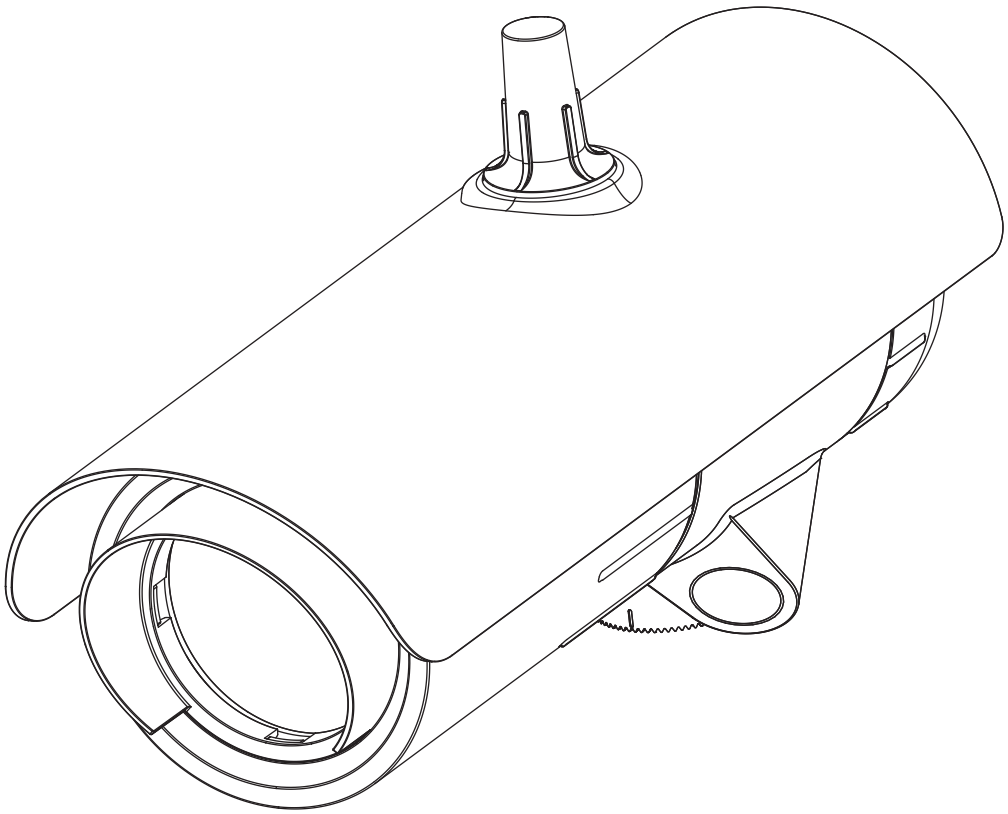

Honeywell

1 Preface

1.1 Introduction

Searchline Excel™ was designed, engineered and tested to be a robust, reliable Open-Path Flammable Hydrocarbon Gas Detector (OPFHGD) available from Honeywell to date and has subsequently proven itself in the field in many applications worldwide.

Searchline Excel Plus and Searchline Excel Edge are third generation Open Path Flammable Hydrocarbon Gas Leak Detectors taking these products to new heights of performance.

Searchline Excel Plus is an Open Path Flammable Hydrocarbon Gas Detector for safety applications with coverage from 2 m to 120 m (6 to 393 ft) range. Searchline Excel Edge is a new Perimeter Monitoring Open Path Flammable Hydrocarbon Gas Leak Detector with coverage from 60 m to 330 m (196 to 1,082 ft) range. Both come with mounts and sunshades as a complete system and are supported by alignment and test accessories.

Design and technology employed in Searchline Excel Plus and Searchline Excel Edge provide additional resistance to certain adverse effects of the operating environment and non-ideal installation than previous generations of OPFHGDs. A closer variability across the core hydrocarbon gasses, full Performance and Safety Instrumented Certification and advanced diagnostics make Searchline Excel Plus and Searchline Excel Edge the high standard in flammable gas leak detection. These products can outperform both NDIR and laser-based open path flammable hydrocarbon gas leak detectors even in harsh environments, maintaining uptime after some others have ceased to function.

With careful consideration of the intended operating environment and the installation design, the installer/operator can maximise the reliability, functionality and performance achieved with Searchline Excel Plus and Searchline Excel Edge with functionality improved, even in many adverse environmental conditions.

This is achieved via advanced optical element design, increasing the beam size and tightening the profile and improving the optical coupling to increase uptime in even foggy environments.

A tighter response to core hydrocarbon gasses and performance certification improves operational parameters.

Advanced diagnostics includes a real-time monitoring of alignment to indicate non-optimal alignment and so allow peak performance to be maintained.

Before designing or specifying an installation for Searchline Excel Plus or Searchline Excel Edge, it is strongly recommended that the installation design authority reads all of this manual and considers how the information and recommendations provided can be applied to their installation(s) and the overall Safety Case.

If you have any queries concerning your installation design, please contact Honeywell Analytics or your local agents.

1.2 Disclaimer

Searchline Excel Plus and Searchline Excel Edge Open Path Flammable Hydrocarbon Gas Detectors are flammable hydrocarbon gas detection systems incorporating a cooperative transmitter/receiver pair to identify the presence of a range of flammable gases. Honeywell is not liable for any gas leak investigation or service call carried out or arranged in response to a Searchline alarm. Honeywell Analytics is not responsible for installation and/or use of its equipment if not done in accordance with the appropriate issue and/or amendment of this manual. Please note that product designs may change from time to time and the images in this manual should only be used as a guide.

Honeywell Analytics is committed to ensuring that customers achieve reliable operation of their Searchline Excel Plus and Searchline Excel Edge Open Path Flammable Hydrocarbon Gas Detectors. For this reason, Searchline Excel Plus and Searchline Excel Edge should only be installed by fully trained personnel (trained by Honeywell Analytics or a Honeywell Analytics authorised trainer).

1.3 Scope

This Technical Manual describes how to install Searchline Excel Plus and Searchline Excel Edge detectors and how to commission and operate these in order to ensure correct and optimal performance.

1.4 How to Use This Manual

This Technical Manual is structured to cover the instruments, installation (mechanical and electrical), set-up and commissioning, operating and maintenance. This manual is available in PDF format.

1.5 Copyright & Trademarks

This document is the copyright of Honeywell Analytics.

Searchline Excel is a Honeywell trademark.

1.6 Patents

The Searchline Excel Plus and Searchline Excel Edge Open-Path Flammable Hydrocarbon Gas Detectors use patented technology.

Table of Contents

Section Page

1 Preface 2

1.1 Introduction 2
1.2 Disclaimer 2
1.3 Scope 2
1.4 How to Use This Manual 2
1.5 Copyright & Trademarks 2
1.6 Patents 2

2 Safety and Information 7

2.1 Warnings and Cautions 7
2.2 Specific Conditions of Use 8
2.3 Important Information 8
2.4 Organisational Measures for Functional Safety 9
2.5 Abbreviations 9

3 Overview 10

3.1 Description of Product 10
3.2 Description of Function 10
3.3 Applications 11
3.4 Safety Case 11
3.5 Environmental Factors 11
3.6 Searchline Excel Plus - Medium Range Safety Open Path Flammable Hydrocarbon Gas Detector 11
3.7 Searchline Excel Edge - Long Range Perimeter Monitoring Open Path Flammable Hydrocarbon Gas Detector 12
3.8 Transmitter/Receiver Overview 12
3.9 Transmitter 12
3.10 Receiver 13
3.11 Mounting Accessories and Flexibility 13
3.12 Available Accessories 14
3.13 Available Spares 14

4 Siting Considerations 15

4.1 Safety Case Framework 15
4.2 Location for Best Coverage 15
4.2.1 Location to Maximise Reliability and Functionality 16
4.2.2 Beam Path 16
4.3 Supporting Structure 17
4.4 Orientation 18
4.5 Change in Site Infrastructure 18
4.6 Bluetooth Considerations 18

5 Mechanical Installation 19

5.1 What's in the Box 19
5.2 Visual Check after Transportation 19
5.3 Description 19
5.4 Main Parts 20
5.5 Mounting the transmitter and receiver 21
5.6 Changing to Mount Plate Adaptor 23
5.7 Pole Mount Installation 24
5.7.1 Install Universal Mounting Bracket 24
5.8 Wall Mount Installation 25
5.9 Assemble Cable Glands 26
5.10 Connect Cable Glands to the transmitter and receiver 26
5.11 Attach the instrument to the mount 27
5.12 Connect Wires to PCB Terminals 28
5.13 Sunshade Installation 29
5.14 Transmitter / Receiver removal 30

6 Electrical Installation 31

6.1 Receiver Electrical Installation 31
6.1.1 Receiver Power Supply Requirements 31
6.1.2 Receiver 4–20 mA Current Loop 32
6.1.3 Relays 32

Section **Page**

6.2 Receiver Connections / Wiring Diagram 32
6.2.1 Receiver Terminal Wiring Description 33
6.2.2 Power Consumption of Excel Components (Typical) 34
6.2.3 Connection for mA loop Configuration as Current Source 35
6.2.4 Connection for mA Loop Configuration as Current Sink 35
6.2.5 Connection for mA Loop Configuration as Isolated Output 36
6.2.6 Cabling Recommendations 36
6.2.7 Earthing Recommendations 36
6.2.8 Modbus 36
6.2.9 Connection to Honeywell OELD 37
6.3 Transmitter Electrical Installation 38
6.3.1 Transmitter Power Supply Requirements 38
6.3.2 Transmitter Connections / Wiring diagram 39
6.3.3 LED Indicator Switch Off 39
6.3.4 Transmitter with LED Indicator enabled 40
6.3.5 Transmitter with LED Indicator disabled 40

7 Alignment and Commissioning 41

7.1 General 41
7.2 Equipment Required for Alignment and Commissioning 42
7.3 Alignment Scope 43
7.4 Basic Alignment 43
7.5 Accurate Alignment 47
7.6 Commissioning Searchline Excel Plus & Searchline Excel Edge 48
7.6.1 Connect to Honeywell Fixed Platform App via Mobile Device 48
7.6.2 Power up Transmitter and Receiver 48
7.6.3 Set the Real-time Clock 48
7.6.4 Confirm Optical Alignment 48
7.6.5 Tighten the Bolts 48
7.6.6 Functional Test 49
7.6.7 4–20 mA Loop Integrity Test 49
7.6.8 Clear Historical Fault/Warning Log/Trend History Data/Alarm History Log 49
7.6.9 Customer Notified 49
7.6.10 System Status 49
7.6.11 Installation Checks/Tests 49

8 Operation and Configuration 53

8.1 Operation 53
8.2 Status Signalling 53
8.2.1 LED Visual Status Indicator 53
8.2.2 mA Loop Status 54
8.2.3 Relay Signalling 55
8.3 Normal Operation 55
8.4 Warning 55
8.4.1 Beam Block Warning 55
8.5 Operation During Fault 57
8.6 Operation During Alarm 57
8.6.1 Low alarm 57
8.6.2 Alarm 57
8.6.3 Over-range 57
8.7 Configuration Change and Parameters 57
8.7.1 mA Loop parameters 58
8.7.2 Other parameters 59

9 Maintenance 61

9.1 Inspection and Cleaning 61
9.2 Deluge and Flooding 61
9.3 Functional Testing using Functional Test Filters 62
9.3.1 Basic Functional Test 62
9.3.2 Advanced Functional Test 63
9.4 Calibration Check using the Gassing Cell 64
9.5 Alignment Scope 66
9.6 Module Replacement 66
9.6.1 Receiver Modules 66
9.6.2 Transmitter Modules 66
9.7 Operational Maintenance 67

Section Page

10 Communications 68

10.1 HART® 68
10.1.1 Searchline Excel Plus & Searchline Excel Edge HART Interface 69
10.2 HART Menu Structure 70
10.2.1 Selecting the Gas Reading Units 75
10.3 Commissioning using HART DTM Communications 75
10.3.1 First Time Switch On 75
10.3.2 User Configuration 76
10.3.3 Configure Warning, Inhibit and Over-range Signal Levels 77
10.3.4 Configure Device Identification Information 77
10.3.5 Test 4–20 mA Loop Integrity 78
10.3.6 Configure Internal Alarm Threshold 78
10.3.7 Clear Alarm Latch 78
10.4 Maintenance using HART Communications 79
10.4.1 Inspection 79
10.4.2 Proof Test (Gas Leak Challenge) 80
10.4.3 Investigation of Faults or Warnings 80
10.5 Modbus 81
10.5.1 Programming the Host 81
10.5.2 Addressing Conventions and Register Values 81
10.5.3 Modbus Cables 81
10.5.4 Modbus Electrical Connections 81
10.5.5 Modbus Termination Resistor 81
10.5.6 Modbus Multi-Drop Mode 82
10.5.7 Modbus Protocol 82
10.5.8 Modbus Registers 82

11 Problem Solving 87

11.1 Introduction 87
11.2 Problem Solving 88

12 Certification and Approvals 93

12.1 ATEX and UKCA Certification 93
12.2 IECEx Certification 93
12.3 cULus Certification 93
12.4 INMETRO Certification 94
12.5 Labelling 94
12.6 EU Declaration of Conformity 94
12.7 RoHS 95
12.8 China RoHS 95
12.9 WEEE 95
12.10 EMC 95
12.11 RED 95
12.12 REACH 95
12.13 FCC 95
12.14 IC 96
12.15 Export Compliance Classification 96
12.16 Wireless Approvals 96
12.17 Bluetooth® 96

13 Ordering Information 97

14 Specifications 98

15 Product Warranty 101

List of Figures

		Page
Figure 1.	Transmitter and receiver general view	12
Figure 2.	Adjustment ranges	13
Figure 3.	The Layered Safety Model	15
Figure 4.	Beam clearance arc	17
Figure 5.	Steel pipe supporting structure	18
Figure 6.	Searchline Excel Plus & Searchline Excel Edge general view	20
Figure 7.	Universal Mounting Bracket general view and dimensions	21
Figure 8.	Universal Mounting Bracket exploded view	22
Figure 9.	Changing Mount Plate Adaptor for Universal Mounting Bracket	23
Figure 10.	Universal Mounting Bracket fitment to pole with U-bolts	24
Figure 11.	Universal Mounting Bracket fitment using Worm Drive Clips	25
Figure 12.	Wall mount installation	25
Figure 13.	Example of cable gland	26
Figure 14.	Connect cable glands to the instrument	26
Figure 15.	Attaching the instrument to the mount	27
Figure 16.	PCB Terminals	28
Figure 17.	Sunshade and antenna cover	29
Figure 18.	Removing the instrument from the mount	30
Figure 19.	Receiver Terminal Connector Label	32
Figure 20.	Receiver Terminal Wiring Compartment	33
Figure 21.	Receiver Connections	34
Figure 22.	mA loop configuration as current source	35
Figure 23.	mA loop configuration as current sink	35
Figure 24.	mA loop configuration as isolated output	36
Figure 25.	Connection to Honeywell OELD	37
Figure 26.	mA loop configuration as current source	37
Figure 27.	mA loop configuration as current sink	38
Figure 28.	Transmitter Terminal Connector Label	39
Figure 29.	Transmitter Connections	39
Figure 30.	Searchline Excel Plus & Edge transmitter and receiver general view	42
Figure 31.	Alignment Scope general view	43
Figure 32.	Setting the initial position of Front lock handle	44
Figure 33.	Aligning spacers to cowling gap	44
Figure 34.	Fitting the Alignment Scope onto four slots	45
Figure 35.	Locking the Alignment Scope	45
Figure 36.	Set the Viewing Arm position	46
Figure 37.	The Viewfinder	46
Figure 38.	Off-axis view versus basic alignment	46
Figure 39.	Fine Adjustment Rings and view after accurate alignment	48
Figure 40.	Low and High Functional Test Filter	62
Figure 41.	Extender Pole for Functional Test Filters	62
Figure 42.	Connecting the gassing test cell to the receiver	65
Figure 43.	Receiver modules general view	66
Figure 44.	Transmitter modules general view	66

Revision History

Revision	Comment	Date
Issue 1	A05444	June 2021
Issue 2	A05536	October 2021
Issue 3 (FW_3.24)	ECN-00033638	July 2023
Issue 4 (FW_3.26)	ECN-00038883	June 2024

2 Safety and Information

2.1 Warnings and Cautions

⚠WARNING

1. Searchline Excel Plus & Searchline Excel Edge Open Path Flammable Hydrocarbon Gas Detectors are certified for and intended for use in potentially hazardous areas. Installation, operation and maintenance of the instruments must meet requirements on safety and operation in hazardous areas.
2. Installation must be in accordance with the recognized standards of the appropriate authority in the country concerned. For Europe see EN 60079-14 and EN 60079-29-2.
3. For installations in the UK, the Code of Practice SELECTION, INSTALLATION AND MAINTENANCE OF ELECTRICAL APPARATUS FOR USE IN POTENTIALLY EXPLOSIVE ATMOSPHERES should be strictly observed. General recommendations are given in BS EN 60079-14 & IEC 60079-14. Refer to BS EN 60079-29-2 & IEC 60079-29-2 in the UK or the appropriate local or national regulations.
4. For installations in North America, the National Electrical Code (NFPA 70) or later issues should be strictly observed.
5. Searchline Excel Plus & Searchline Excel Edge Open Path Flammable Hydrocarbon Gas Detectors must be properly earthed to protect against electrical shock and minimise electrical interference. For electrical installation design considerations refer to Chapter 6 Electrical Installation.
6. Operators must be fully aware of the action to be taken if the gas concentration exceeds an alarm level.
7. Dismantling or repair of equipment should be carried out in the safe area only.
8. Test gases may be toxic and/or combustible. Refer to Material Safety Sheets for appropriate warnings.
9. Do NOT drill holes in any housing as this will invalidate the explosion protection.
10. In order to maintain electrical safety, the instruments must NOT be operated in atmospheres containing more than 21% oxygen.
11. Ensure that the bolts which secure flame-proof enclosures are fully tightened. The securing bolts used are made from a special certified grade of steel. Only bolts supplied by Honeywell Analytics should be fitted for this purpose.
12. Do NOT open the enclosure in the presence of an explosive atmosphere.
13. The transmitter units contain high voltages when operational. These are discharged when the unit is removed from its enclosure.
14. The conduit and cable glands fitted to Searchline Excel should NOT be modified. If, however, it becomes necessary to make modifications they must comply with the relevant national Codes of Practice.
15. The irradiance and power emitted by the Searchline Excel transmitters is less than 5 mW/mm^2 and 15 mW/mm^2 respectively. This is designated as eye safe.
16. The equipment is NOT intended to be mounted onto surfaces which may act as sources of heating or cooling.
17. Do NOT operate the instruments outside the temperature range stated in the Specification chapter.
18. Do NOT open the front enclosures. Doing so will invalidate the warranty. Front enclosures may be opened only for advised repair maintenance by a Honeywell-authorized and qualified person.
19. Do NOT modify or alter the construction of the product as essential safety and certification requirements may be invalidated.
20. Installation, set-up and maintenance must be conducted only by trained personnel. Refer to the manual at all times.
21. Access to the interior of the product, when carrying out any work, must be conducted only by trained personnel.
22. The plastic transport cap supplied must be replaced with suitably certified closers (such as glands or stopping plugs) prior to commissioning. Failure to do so presents a potential source of ignition. One certified stopping plug is supplied as standard.
23. Do NOT rely on the local visual indicator for safety related purposes.

NOTE:
If the last connection and synchronization between the Honeywell Fixed Platform App and the server was established **more than 1 year previously**, a caution message will be shown in the App with request to establish an Internet connection and renew security certificate. This will NOT affect instrument's operation.

Items of Disposal	
Enclosure	Painted 316 Grade Stainless Steel
Standard Adjustable Mounting Bracket	Stainless Steel
Sunshade	Plastic as standard or Stainless Steel (optional extra)



This symbol indicates that this product and/or parts of the product may not be treated as household or municipal waste. Waste electrical products (end of life) should be recovered/recycled where suitable specialist WEEE disposal facilities exist. For more information about recycling of this product, contact your local authority, our agent/ distributor or the manufacturer.



The EFUP symbol indicates application of the Environment Friendly Use Period policy.



The EX symbol signs are hazard warning signs the warns of the danger of explosive atmospheres.

2.2 Specific Conditions of Use

1. Flamepaths are NOT to be repaired.
2. The equipment shall be connected to circuits providing Overvoltage Category II or better according to IEC/EN 60664-1.
3. To minimize the risk of electrostatic charge, provisions shall be made for an adequate grounding of the equipment, including accessories (e.g. sunshade). Equipment shall be installed in a manner so that accidental discharge shall not occur.
4. The equipment must be installed as specified in the manufacturer's instructions.
5. Only units of LFL.m apply

2.3 Important Information

This manual is for use with Searchline Excel Plus & Searchline Excel Edge Open Path Flammable Hydrocarbon Gas Detectors only.

Honeywell Analytics can take no responsibility for installation and/or use of this equipment if not done so in accordance with the appropriate issue and/or amendment of this manual.

The reader of this manual should ensure that it is appropriate in all details for the exact equipment to be installed and/or operated. If in doubt, contact Honeywell Analytics for advice.

The information supplied in this document is to the best of Honeywell's knowledge and is accurate as of the date of publication. However, specifications or other data may change without notice, and Honeywell assumes no responsibility for its use. You are strongly advised to obtain copies of the most recent regulations or other requirements applicable to these products. This document is not intended to be the basis of an offer or contract.

Honeywell Analytics would greatly appreciate being informed of any errors or omissions that may be found in the content of this document.

For information not covered in this manual, or if there is a requirement to send comments/corrections about this manual, please contact Honeywell Analytics using the contact details given on the back page.

Honeywell Analytics reserves the right to change or revise the information supplied in this manual without notice and without obligation to notify any person or organization of such revision or change. If information is required that does not appear in this manual, please contact the local distributor/agent or Honeywell Analytics.

The following types of notices are used throughout this Manual:

⚠WARNING

Identifies a hazardous or unsafe practice which could result in severe injury or death to personnel.

⚠CAUTION

Identifies a hazardous or unsafe practice which could result in minor injury to personnel, or product or property damage.

Note
Identifies useful/additional information.

2.4 Organisational Measures for Functional Safety

Refer to the Searchline Excel Plus & Searchline Excel Edge *Safety Manual* for more information.

2.5 Abbreviations

ADC	Analog-to-Digital Converter
AFE	Analog Front End
ATEX	European Hazardous Area Approval
CSA	Canadian Standards Association
DNV	Det Norske Veritas
DTM	Device Type Manager
EDD	Electronic Device Description
EDDL	Electronic Data Description Language
EEMUA	Engineering Equipment and Materials Users Association
EFUP	Environment Friendly Use Period
EMC	Electro-Magnetic Compatibility
ESD	Emergency Shut Down
FCC	Federal Communications Commission
FDT	Field Device Type
FM	Factory Mutual
FSD	Full Scale Deflection
IEC	International Electrotechnical Commission
IECEx	International Electrotechnical Commission Explosive
INMETRO	Instituto Nacional de Metrologia, Qualidade e Tecnologia
IC	Industry Canada
IP	Ingress Protection
IR	Infrared
IS	Intrinsically Safe
LED	Light-Emitting Diode
LEL	Lower Explosive Limit
LEL.m	Lower Explosive Limit Meter
NDIR	Non-Dispersive Infrared Spectroscopy
NPT	National Pipe Thread
OPFHGD	Open Path Flammable Hydrocarbon Gas Detector
PC	Personal Computer
PCB	Printed Circuit Board
PDF	Portable Document Format
ppm	Parts per Million
PSU	Power Supply Unit
REACH	Registration, Evaluation, Authorisation and Restriction of Chemicals
RED	Radio Equipment Directive
RFI	Radio Frequency Interference
RoHS	Restriction of Hazardous Substances
RTU	Remote Terminal Unit
R/W	Read/Write
SELV	Safety Extra Low Voltage
SIL	Safety Integrity Level
SPDT	Single Pole Double Throw
UKCA	United Kingdom Hazardous Area Approval
UL	Underwriters Laboratories
UMS	User Management Suite
UTC	Coordinated Universal Time
WEEE	Waste Electrical and Electronic Equipment

3 Overview

3.1 Description of Product

Searchline Excel Plus & Searchline Excel Edge Open Path Flammable Hydrocarbon Gas Detectors provide enhanced safety monitoring in the event of loss of containment of flammable hydrocarbon gases. Searchline Excel Plus & Searchline Excel Edge help facilities protect people, plant and the environment against the hazards of flammable hydrocarbons. Their strength is that they reliably detect a broad range of hydrocarbon gases and can do this in extremes of weather, even through thick fog.

The new Searchline Excel is available in two versions:

- Searchline Excel Plus – Medium Range Safety Open-Path Flammable Hydrocarbon Gas Detector
- Searchline Excel Edge – Long Range Perimeter Monitoring Open-Path Flammable Hydrocarbon Gas Detector

Searchline Excel Plus & Searchline Excel Edge OPFHGD consist of a cooperative transmitter and receiver located where a flammable hydrocarbon gas cloud could occur. The transmitter unit sends an infrared beam to the receiver unit. Searchline Excel Plus and Searchline Excel Edge instruments detect a gas cloud that crosses this beam.

3.2 Description of Function

Searchline Excel Plus & Searchline Excel Edge flammable gas detectors operate on the principle of infrared absorption. Gases absorb light at specific wavelengths depending on their molecular composition. Hydrocarbon gases absorb in the infrared region of the electromagnetic spectrum. If a cloud of hydrocarbon gas is present, part of the infrared light is absorbed by the gas, causing a reduction in the light energy that is proportional to the amount of gas in the beam. The amount of absorption depends upon the size of the gas cloud impinging on the beam and upon the concentration of that cloud.

Searchline Excel Plus & Searchline Excel Edge transmitter units produce a well-defined focused beam of infrared light and the partner, co-operative receiver unit detects this beam and determines the amount of gas present and reacts accordingly. Both units have advanced diagnostics built in. Each unit is housed in a robust stainless steel housing. The receiver produces a 4–20 mA analogue output equivalent to 0–5 LEL.m (Lower Explosive Limit x meters) / 0–250,000 ppm.m (parts per million x meters) of gas as well as a stepped level option and relay outputs and digital communications outputs.

Note
The infrared beam is invisible and eye safe.

The transmitter and receiver units incorporate intelligent heated optics designed to minimise the build-up of humidity, condensation, snow or ice on the glass windows, that could obscure the optics in extreme conditions. In-built diagnostics monitor the clarity of the transmitter and receiver windows. An advanced nano-technology coating on the windows helps to maintain clarity.

The system is microprocessor controlled with advanced integral self-diagnostics and fault-finding facilities that drive a status-based maintenance and extended cycle time.

Local indication of instrument status is provided via LEDs on the transmitter and a high visibility HALO light ring on the receiver.

Local communication between an operator/technician and the gas detector system is via an associated Handheld Unit that uses the receiver's inbuilt Bluetooth wireless serial link. The Handheld Unit provides the user with an advanced user-friendly App supporting the Honeywell Fire and Gas Platform products with menu-style interface to select and invoke commands for commissioning and configuring the system and for operator and maintenance viewing the system state and measurements.

The Handheld Unit is connected to the receiver via wireless Bluetooth over a range of typically 20 m (66 ft) enabling simple remote access.

The Fixed Platform App has been tested with Ecom Smart-EX02 mobile phone. Other phones and tablets running Android 5.1 (Lollipop) or higher may work, but Honeywell does not guarantee full functionality.

3.3 Applications

Searchline Excel Plus & Searchline Excel Edge fulfil the requirement for long maintenance cycles with advanced diagnostics and EN16508 certification supporting this approach.

Searchline Excel Plus addresses wide range of safety applications in industries including:

- Oilfield exploration
- Offshore production platforms & vessels (FPSO's)
- Downstream oilfield processing plants
- Gas transport and pipelines
- Large storage areas & buildings
- Petro-chemical plants like refineries
- Power generation

Searchline Excel Edge delivers long range flammable gas perimeter monitoring even in harsh conditions. This fence-line monitoring helps customers to deliver due diligence in emissions control. Application areas include:

- Refineries
- Processing Plants
- Chemical Plants
- Tank farms
- Power plants

3.4 Safety Case

Searchline Excel Plus & Searchline Excel Edge provide a credible Safety Case with aim to help facilities protect people, plant and the environment. The instruments detects a broad range of gases with a tight response curve. The advised Safety Case is driven by the units of detection as follows:

Flammable Gases

The Safety Case for a flammable gas release is driven by explosive threat and flammable threat. For flammable gases, the advised Safety Case level is set as A1/A2, determined by LEL.m.

Toxic Gases

The Safety Case for a toxic gas release is driven by exposure level and time (Toxicity). For toxic gases, the advised Safety Case level is set as A1/A2, determined by ppm.m.

3.5 Environmental Factors

Searchline Excel Plus & Searchline Excel Edge employ third generation advanced optics and detection to make these Open Path Flammable Hydrocarbon Gas Leak Detectors some of the most effective available and so continue online in demanding weather, such as heavy rain, snow and thick fog. These open path flammable gas detectors will continue to provide safety coverage long after dense fog has rendered some other NDIR or laser-based products offline.

As with all such instruments, performance and reliability may be adversely affected by poor installation, vibration, intense heat, sources of heavy contamination, blizzards, ice, exceptionally thick fog, deluge and flooding, subsidence, accidental impact and intense electromagnetic fields. Care should be taken in installation and use to avoid or minimize these risks.

3.6 Searchline Excel Plus - Medium Range Safety Open Path Flammable Hydrocarbon Gas Detector

Searchline Excel Plus is a third generation Open Path Flammable Hydrocarbon Gas Leak Detector for first line flammable gas safety instrumented applications. Best practice suggests that this be combined with Point Flammable Gas Leak Detectors (such as Searchpoint Optima) and Ultrasonic Gas Leak Detectors (such as Searchzone Sonik) as required by the specific application and site Safety Case.

Searchline Excel Plus delivers improved functionality/uptime by virtue of advanced optical components, design and diagnostics, including alignment quality. Searchline Excel Plus is part of the new Honeywell Fixed Fire and Gas Platform with universal mount, Ex de wiring compartment and Bluetooth access. This means that Searchline Excel Plus is easier to install and set-up correctly and that maintenance cycles can be extended.

Searchline Excel Plus has global Hazloc certification, Marine certification, Performance and Safety Instrumented Certification.

Searchline Excel Plus will remain online in weather conditions that give poor visibility, long after some other Open Path Gas Detector technologies have ceased to function.

3.7 Searchline Excel Edge - Long Range Perimeter Monitoring Open Path Flammable Hydrocarbon Gas Detector

Searchline Excel Edge is a long-range Open Path Flammable Hydrocarbon Gas Leak Detector for Perimeter line protection. By encircling a plant, storage area or process area, a flammable gas cloud leaving or entering that area is detected and an alarm raised.

The 330 m (1,082 ft) range enables large areas to be protected. At extended ranges the perimeter detection may be affected by particularly thick fog, but will be re-established when fog lessens or lifts. The device status is available at all times as part of the advanced diagnostics.

Searchline Excel Edge is a cost-effective way of showing environmental diligence and also protecting plants from external emissions.

3.8 Transmitter/Receiver Overview

Each type of Searchline Excel gas detector consists of two units, a transmitter and a receiver. This separate co-operative transmitter/receiver configuration provides a reliable basis for open path gas detection.

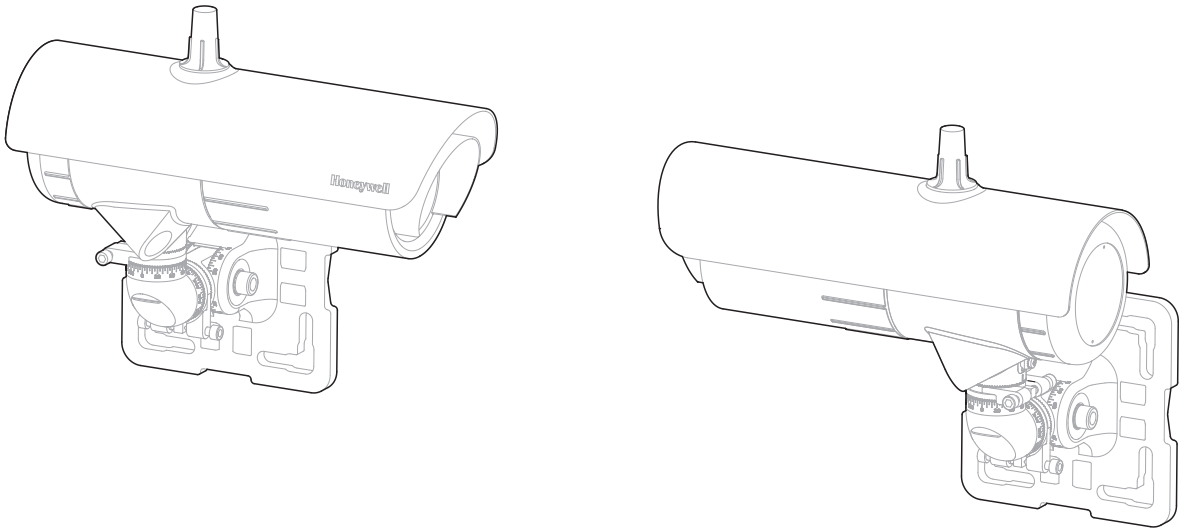

Figure 1. Transmitter and receiver general view

When designing an installation for Searchline Excel Plus or Searchline Excel Edge it is important that the correct application and open path flammable hydrocarbon gas detector is selected and specified.

There are two versions of the new advanced Searchline Excel available:

- Searchline Excel Plus - a medium range 2 m to 120 m (6 ft to 393 ft) safety product.
- Searchline Excel Edge – a long range 60 m to 330 m (196 ft to 1082 ft) perimeter monitoring product.

The transmitter and receiver are both supplied with a robust Universal Mounting Bracket as standard. This allows mounting to walls, pipes and other infrastructure, within the limitations of this Manual. With 3 degrees of freedom and fine tuning, simple and repeatable alignment of the transmitter and receiver is achieved. Installation details are given in Chapter 7 *Alignment and Commissioning*.

⚠CAUTION

The transmitter and receiver must be installed in horizontal level (+/- 45 degrees tilt).

3.9 Transmitter

The Searchline Excel Plus & Searchline Excel Edge transmitter delivers an intense, collimated infrared beam produced by a Xenon arc flashlamp. In order to prevent potentially annoying visible flashes, the visible emissions from the flashlamp are blocked by a filter.

Note
The infrared beam is invisible and eye safe.

The transmitter window is heated in a controlled manner to minimise condensation, frosting and the build-up of ice and snow. During particularly cold operating conditions, the heating of the transmitter window is increased to turbo levels. The turbo mode can be disabled if not required.

Electrical connections to the transmitter are made via a separate Ex de wiring compartment. The wiring diagram is shown in Chapter 6 *Electrical Installation*.

3.10 Receiver

The Searchline Excel receiver collects the infrared beam from the transmitter and performs advanced measurements to enable the hydrocarbon gases in the beam path to be detected and measured.

The receiver window is heated to minimize condensation, frosting and the build-up of snow. The level of heating applied is controlled by the micro-controller and is adjusted from zero to maximum depending on the window temperature.

The primary output of the receiver is a signal in the range 4-20mA and is available as source or sink, 3 or 4 wire options. For most applications, the output is calibrated for a range of 0 to 5 LEL.m (ppm is also available).

The receiver can communicate using the HART protocol, which provides digital communication superimposed on the standard analogue output.

The receiver provides a facility for Modbus digital communication between the receiver and an external controller.

The receiver also features a Bluetooth interface that allows non-intrusive remote connection using a suitable mobile device running the Honeywell Fixed Platform App.

3.11 Mounting Accessories and Flexibility

The Searchline Plus & Edge Excel detector is supplied with a Universal Mounting Bracket as standard that can be simply installed prior to the fitting of the instrument. The Universal Mounting Bracket allows simple fixing onto a wide range of surfaces as well as poles, struts, plates and other plant infrastructure. It is manufactured from high quality Stainless Steel. The 3-axis adjustment and fine adjustment allows the transmitter and receiver pair to be precisely aimed for accurate coaxial alignment.

- Adjustment range in the vertical axis (A) = 0° to 90°
- Adjustment range in the horizontal axis (B) = -45° to +45°
- Adjustment rotational range (C) = -45° to +45°
- Basic graduated adjustment in 5 degree steps
- Graticule for easy setting

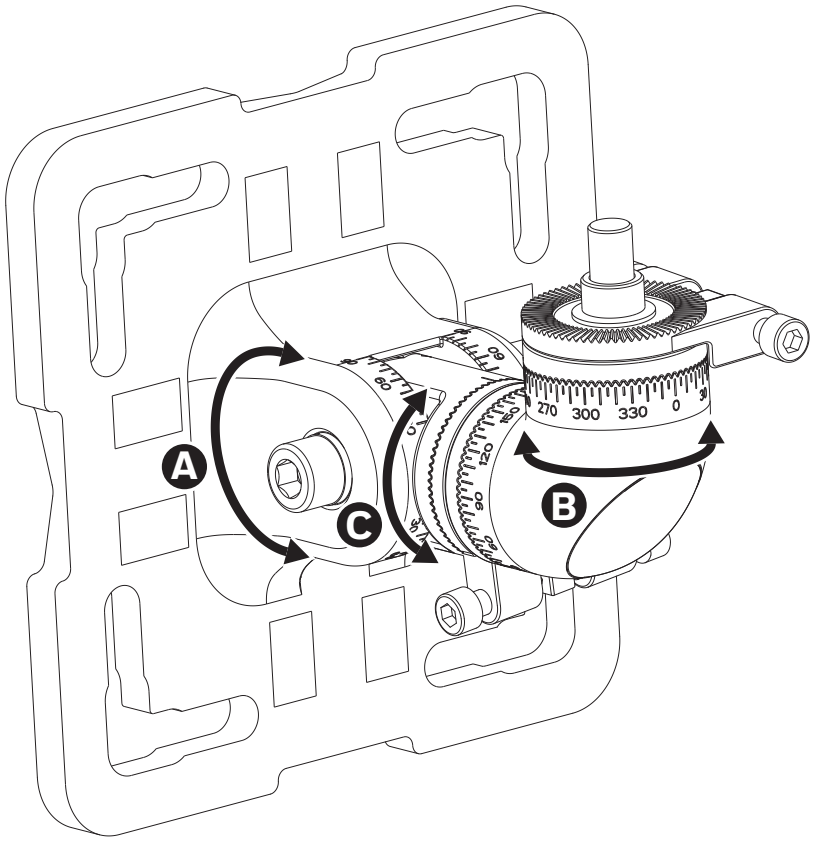

Figure 2. Adjustment ranges

3.12 Available Accessories

The Universal Mounting Bracket, Plastic Sunshade and Honeywell Fixed Platform App are provided as standard.
The following items are available for purchase as optional accessories. Refer to Chapter 13 *Ordering Information* of this manual for more information:

1. Mount plate adaptor for Universal Mounting Bracket (Small to Large)
2. Stainless Steel Sunshade (optional)
3. Hazardous Area Mobile Device
4. Small Universal Mount kit
5. Large Universal Mount kit
6. Test filter set
7. Searchline Excel demo kit in flight case
8. Alignment scope
9. Gassing Test Cell
10. Functional Test Filters Extender

3.13 Available Spares

1. Transmitter module
2. Receiver module
3. Small Universal Mount
4. Standard Sunshade
5. Plug in terminals
6. Antenna and cover

4 Siting Considerations

When designing an installation for a Searchline Excel detector it is important to give due consideration as to the specific application requirements, location and potential sources of problems that may be encountered.

Users are strongly recommended to consult Honeywell experts experienced in site mapping and siting of gas detectors.

4.1 Safety Case Framework

In compliance with IEC 61508, IEC 61511 and EEMUA recommendations, the Safety Case Framework is used as a method of reducing risks at hazardous installations to acceptable levels. The framework is based on the concept of Layers of Protection which is widely recognized by the process industry and clearly defined in industry safety standards.

Considering the application of all types of the protection layers – some layers are preventative (e.g., emergency shut down), while some are there to mitigate the impact of an incident should it occur (e.g., fire and gas protective systems or plant emergency response systems). Other layers of protection can counter occurrence of incidents in the first place (e.g., plant and physical asset protection, constraint and boundary management, operator training, and asset management); while others can provide detection and alerting, and associated guidance (e.g., operator alarms, early event detection, and integrated operator procedures). Layers can either be automated, such as emergency shut down (ESD) equipment, or require human interaction such as operator responses to process alarms. Some layers offer easily quantifiable risk-reduction benefits but require that the risks all be identified before. And still others are less tangible and offer subtler benefits.

An Open Path Gas Detector will generally be used as part of the Layered Safety Model. (for more information, refer to https://www.honeywellprocess.com/library/marketing/brochures/A%20layered%20approach%20to%20plant%20safety.pdf)

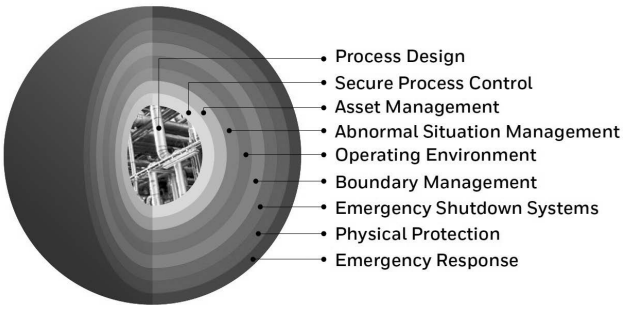

Figure 3. The Layered Safety Model

4.2 Location for Best Coverage

Guidance on the positioning of gas detectors to provide the best detection coverage is contained in BS EN 60079-29-2 & IEC 60079-29-2 and other national Codes of Practice. It is recommended that the installation designer consults these Codes of Practice when determining where detectors are to be located. Appropriate positioning should be determined by the customer based on the Safety Case. In general, the following positions can provide the best results for **Searchline Excel Plus**:

- Below potential leak sources for gases that are heavier than air
- Above potential leak sources for gases that are lighter than air
- Near to leak sources, along the expected leak trajectory, taking account of the prevailing wind direction and any other factors which will influence propagation of the leak
- Between possible leak sources and any potential sources of ignition

The above is also valid for **Searchline Excel Edge** including:

- Siting along edges/boundaries of areas to be monitored
- Siting at height above vegetation and avoiding vehicles or other line of sight blockages

4.2.1 Location to Maximise Reliability and Functionality

Care in choosing the location of Searchline Excel detectors can contribute significantly to the overall reliability and functionality.

When locating units, attempt to avoid areas where they may be adversely affected by the following:

Vibration - Angular vibration of the structure to which Searchline Excel units are attached should be kept to less than +/- 0.5°. Where possible, avoid locations where high levels of vibration will be directly induced into the mounting structure. If close proximity to significant sources of vibration is unavoidable, take steps to reduce coupling of this vibration and maximise the rigidity of the mounting structure.

Intense Heat - Searchline Excel is certified and specified for operation in environments up to +75°C (+167°F). If sources of intense heat (flare stacks, intense sunlight, etc.) are present, a sunshade or similar shield should be fitted to the unit to protect it from excessive heating.

Sources of Heavy Contamination - Despite Searchline Excel's ability to penetrate thick fog and heavy rain and having advanced alignment diagnostics, it is always best to avoid locations where high levels of contaminants will persistently be blown onto the unit's windows. Potential sources of heavy contamination include generator/turbine exhausts, flare stacks, drilling equipment, process vents/chimneys etc. If sources of heavy contamination cannot be avoided, consider fitting extra shielding and/or providing good access for more frequent routine cleaning.

Snow and Ice in Ambient Temperatures below -20°C (-4°F) - The heated optics on Searchline Excel units will melt snow or ice on the windows in ambient temperatures down to approximately -20°C (-4°F).

Below this temperature, snow or ice blown onto the window will not be melted until the ambient temperature rises. If long-term, outdoor operation in very cold climates is intended, it is recommended that extra shielding/covers are employed to prevent snow/ice from being blown onto the windows and building up.

Deluge and Flooding - Searchline Excel is rated IP66/67 and as such will not be damaged by occasional deluge or flooding. However, during such instances the unit may lose its infrared signal and will enter the FAULT state. Also, when the deluge/flooding subsides, there is the possibility that contaminants will be left on the windows. Therefore, it is recommended that Searchline Excel units be located away from areas particularly prone to deluge or flooding.

Areas Prone to Subsidence and Settling - Where possible, it is recommended that Searchline Excel units are not mounted on structures located where problems with subsidence, settling or thawing of permafrost are known to cause significant movement. If such locations cannot be avoided, the foundations of the mounting structure should be engineered to minimise any angular movements.

Areas Prone to Earthquakes - In locations prone to earthquakes, there is a chance that during or after an earthquake, the units of an Searchline Excel gas detector will become misaligned with respect to each other. As Searchline Excel incorporates advanced alignment diagnostics, the units that do not suffer from direct mechanical impact damage during an earthquake should remain undamaged by such events. Anti-vibration mounts are unlikely to be of any benefit and are not recommended. After an earthquake the advanced alignment diagnostics will quickly reveal if re-alignment is needed, but inspection and testing of the units post-earthquake is still recommended.

Accidental Impact - Locations where there is a significant likelihood of equipment, personnel or moving objects accidentally knocking Searchline Excel units out of alignment should where possible be avoided. If such locations cannot be avoided, measures including improved mechanical protection and warning notices should be considered. Note that the in-built advanced diagnostics will warn operators of non-optimal alignment however this has come to pass, provided the units are still functioning after impact.

Intense Electromagnetic Fields - Searchline Excel complies with EN61000-6-3 and EN61000-6-2 (to industrial levels) in addition to the stringent requirements laid out in DNVGL-CG-0339. As such, the system is well protected from interference by electromagnetic fields. However, locations in close proximity to radio/radar transmitters, heavy electrical plant and high voltage power cables may experience field strengths in excess of those specified in EN61000-6-3 and EN61000-6-2. Where possible, such locations should be avoided or units should be installed as far as possible from the source of the electromagnetic field. Measures including additional screening, filtering and transient suppression may also be of benefit in such locations.

4.2.2 Beam Path

The transmitter and receiver units' windows should face each other, coaxially aligned, across the area to be protected and within the specified path lengths:

Searchline Excel detector type	Path length between units
Searchline Excel Plus	2 to 120 m (6 ft to 393 ft)
Searchline Excel Edge	60 to 330 m (196 ft to 1082 ft)

The beam path and immediate surrounds should be kept free of obstructions that might hinder the free movement of air in the protected area or block the infrared beam. A clear beam path of 10 cm (3.9 in) in radius or greater is recommended. In particular, for optimum functionality, avoid areas affected by the following:

1. Steam vents and plumes
2. Smokestacks and chimneys
3. Walkways and personnel areas
4. Splash and spray, e.g. from moving equipment, cooling towers
5. Parking, loading, cranes, vehicle temporary stops, e.g. bus stops, road junctions
6. Vegetation, e.g. shrubs, bushes, branches – if currently clear, movement due to weather and future growth or planting must be considered

Note
Where 1. and 5. cannot be avoided, consider indicating the beam by marking the walkway or road with paint.
In order to fit the alignment scope used during the alignment process, a clear accessible arc of at least 50 cm (1.64 ft) in radius is required close to the unit's cowling as shown.

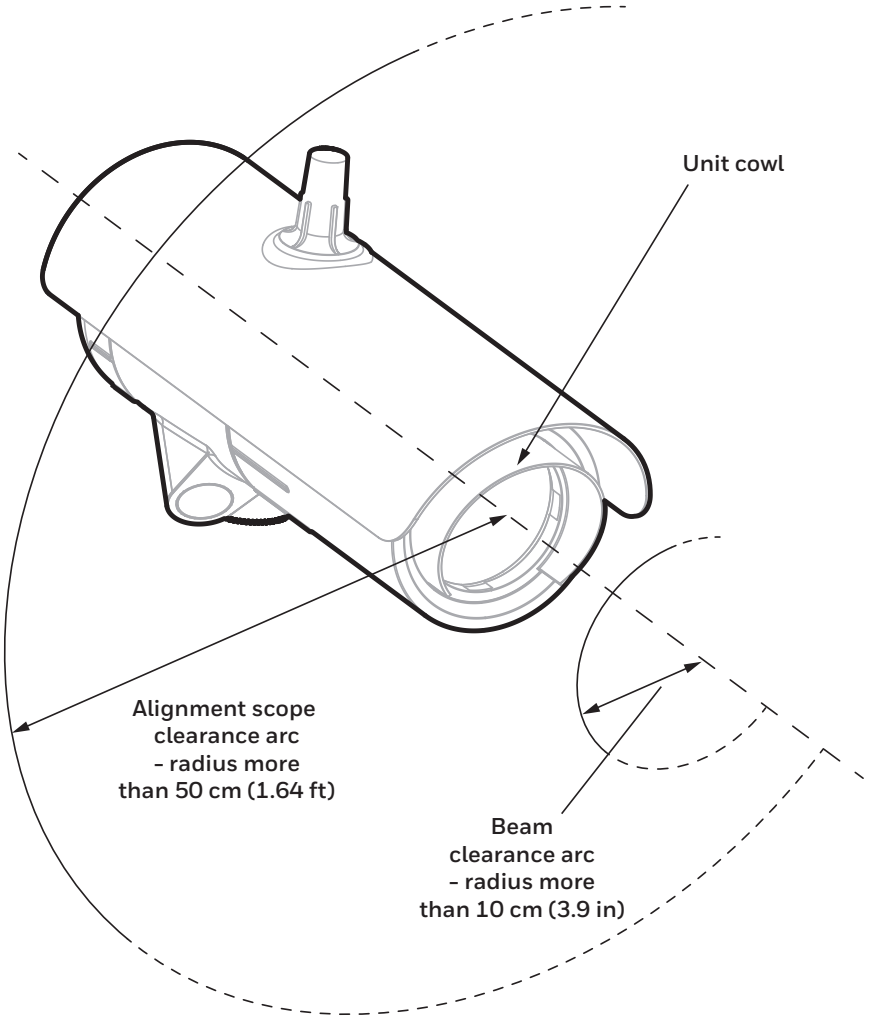

Figure 4. Beam clearance arc

4.3 Supporting Structure

The transmitter and receiver units must be fixed using a suitable mount.

Note
The maximum movement of the supporting structure under all anticipated operating conditions must be ±0.5°.

If either unit is to be free standing and not mounted to existing supports or structures, and the height above the ground is no more than 3 m (9.5 ft), the supporting structure shown is recommended:

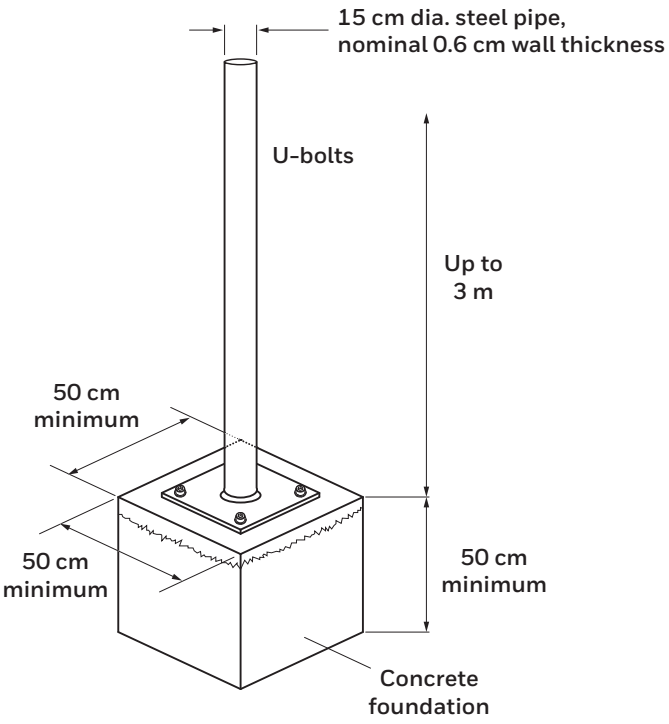

Figure 5. Steel pipe supporting structure

Note
The pipe can be filled with concrete to provide extra robustness if necessary.

4.4 Orientation

Searchline Excel Plus and Searchline Excel Edge are solar immune and therefore there is no need to take account of the sun's movement when considering orientation.

When positioning the units, do not install them with the optical axis at an angle greater than 45° to horizontal. This is to avoid dirt/water build-up on the windows.

4.5 Change in Site Infrastructure

When there are changes in site infrastructure or configuration, which may introduce new sources of gas leak, the user should review the existing configuration of Searchline Excel detectors and decide if it needs to be adapted to suit those changes.

4.6 Bluetooth Considerations

1. Is use of Bluetooth permitted on the site?
2. Is the mobile device rated for operation in hazardous locations?
3. Is the Searchline Excel installed within 20 m from the place where operator will stand?
4. Is there direct visibility ensured between the Searchline Excel and the mobile device?

5 Mechanical Installation

5.1 What's in the Box

1. Searchline Excel transmitter (box no. 1)
2. Searchline Excel receiver (box no. 2)
3. Universal Mounting Bracket (per box)
4. Plastic Sunshade (per box)
5. One certified blanking plug (per box)
6. Tool Kit (per box)
7. Quick Start Guide (per box)

5.2 Visual Check after Transportation

To ensure that the Searchline Excel Plus or Searchline Excel Edge systems were not damaged during transport, perform the following checks:

1. Check the packaging for damage before opening. If the packaging shows signs of tearing, breakage or other damage, immediately inform the transport company and the supplier. Document the damage in an appropriate way (e.g., photographs).
2. Open the packaging carefully to avoid damaging the contents.
3. Examine the Searchline Excel Plus or Searchline Excel Edge receiver and transmitter and the mounts and sunshades for damage. If you find any item to be damaged in any way, immediately inform the transport company and the supplier. Document the damage in an appropriate way (e.g., photographs).
4. In the case of damage:
   a) Leave item(s) in the original packaging
   b) Do not attempt to repair, or operate the detector until the damage claim has been resolved with the transport company or supplier.

⚠CAUTION

1. Installation, set-up and maintenance must be conducted only by trained and authorized personnel.
2. Do NOT open the front enclosure. The warranty of a unit, whose front enclosure has been opened, is invalidated. Front enclosures may be opened only for advised repair maintenance by an authorized and qualified person.
3. Do NOT modify the front enclosure or component parts as this will compromise the hazardous location certification and invalidate the warranty. Front enclosures may be opened only for advised repair maintenance by an authorized and qualified person.
4. Do NOT modify the construction of the detector in any way as this will invalidate the warranty.
5. Open and close the wiring compartment cover with care to avoid deformation.
6. Installation, set-up and maintenance must be conducted only by trained and authorized personnel.
7. Avoid water and dust ingress when opening the wiring compartment to protect the unshielded electronic contacts.
8. Secure the detector when loosening bracket bolts. Unwanted release may cause injury.
9. Check mating surfaces prior to assembly (threads, O-rings). Ensure that they are clean and free of contaminants.
10. Check the O-rings prior to assembly, replace if damaged with genuine parts.
11. The Searchline Excel Plus & Searchline Excel Edge are supplied without cable glands. Ensure that all cable entry threads are sealed with an appropriate plug to eliminate water ingress and thread damage. At installation, the cable entry transportation plugs must be removed and replaced with suitable cable glands, thread adapters or blanking plugs to meet local hazardous location requirements.
12. Check suitability of the blanking plug for its end use on site, ensure it meets local and national regulations.
13. Remove power from the Searchline Excel Plus or Searchline Excel Edge instruments while installing wiring. Do NOT install wires or set up wiring with power applied.

5.3 Description

The Universal Mounting Bracket enables Searchline Excel Plus & Searchline Excel Edge to be fitted to a wide range of plant infrastructure and then appropriately aimed to cover the area to be protected. It is manufactured in 316L Stainless Steel.

A Mount Plate Adaptor for Universal Mounting Bracket is available as option to suit installation on larger diameter poles.

Searchline Excel Plus & Searchline Excel Edge cable entries are 2 x M25 or 2 x ¾" NPT dependent on the version.

The two compartment design means that the sensing electronic module and wiring compartment are separate. There are no set-up switches within the electronics.

Two pluggable connectors are provided within the wiring compartment. The connectors feature mechanical retention.

5.4 Main Parts

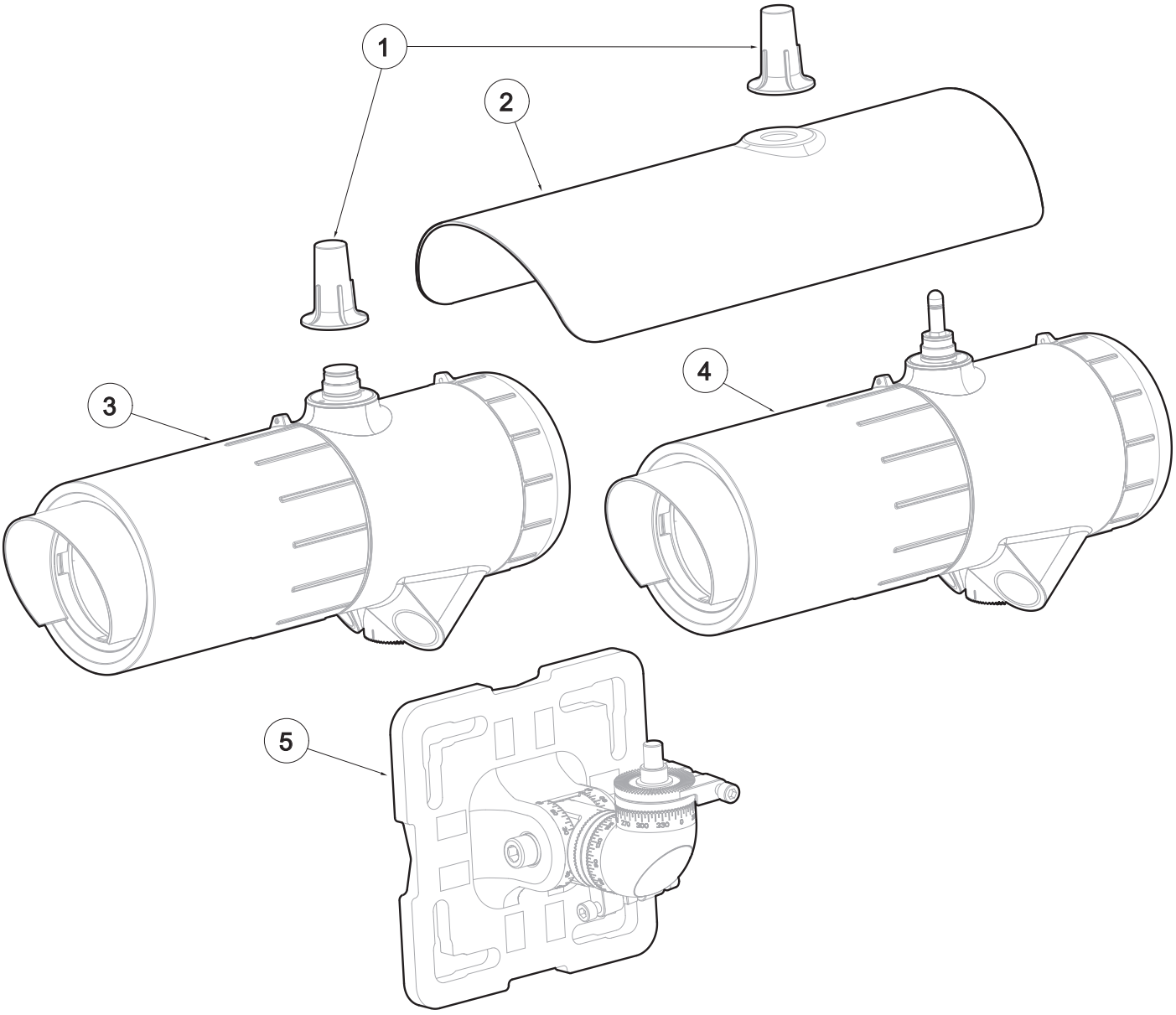

Figure 6. Searchline Excel Plus & Searchline Excel Edge general view

LEGEND:

1. Antenna cover
2. Sunshade
3. Searchline Excel Plus / Searchline Excel Edge transmitter
4. Searchline Excel Plus / Searchline Excel Edge receiver
5. Universal Mounting Bracket

5.5 Mounting the transmitter and receiver

The mechanical installation is the same for both the receiver and the transmitter.

Searchline Excel Plus & Searchline Excel Edge will normally be mounted at height, for example secured to a pole using the U-Bolts or Worm Drive Clips supplied in the Pole Installation Kit (recommended option).

The supplied Universal Mounting Bracket allows mounting on a plate, pole or other plant infrastructure. All bolts are captive to avoid accidental loss during installation.

⚠CAUTION

To ensure functionality of the fine adjustment screws, clean the threads with a fabric and apply grease prior to installation. Repeat with each re-alignment.

⚠CAUTION

IMPORTANT: When tightening the pivot bolts, **first, tighten the left-facing** horizontal M10 bolt to 30 Nm/ 22 lb.ft torque to fix the pivot in its horizontal position. **Second, tighten the right-facing** horizontal M10 bolt to 10 Nm/ 7.4 lb.ft torque.

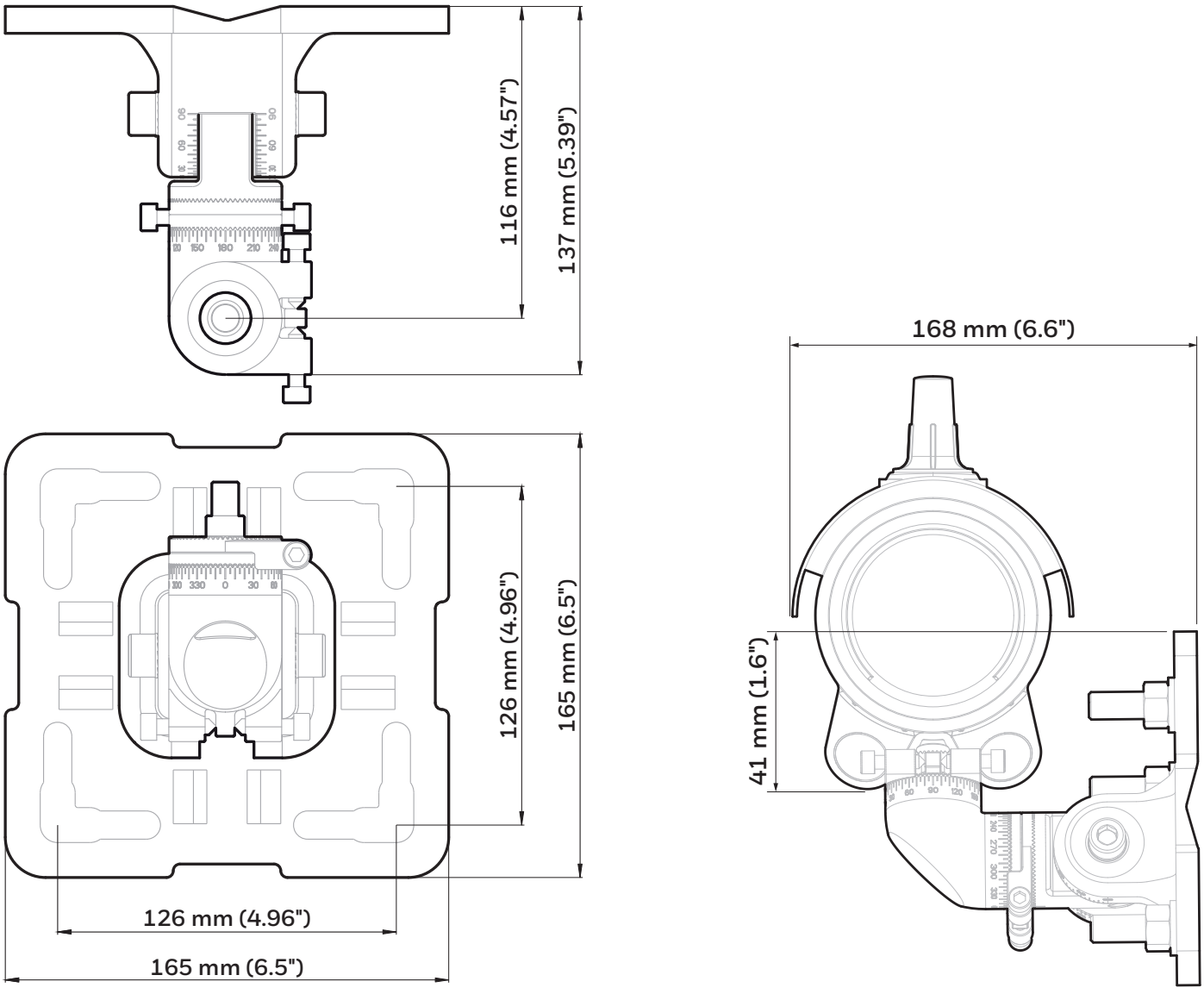

Figure 7. Universal Mounting Bracket general view and dimensions

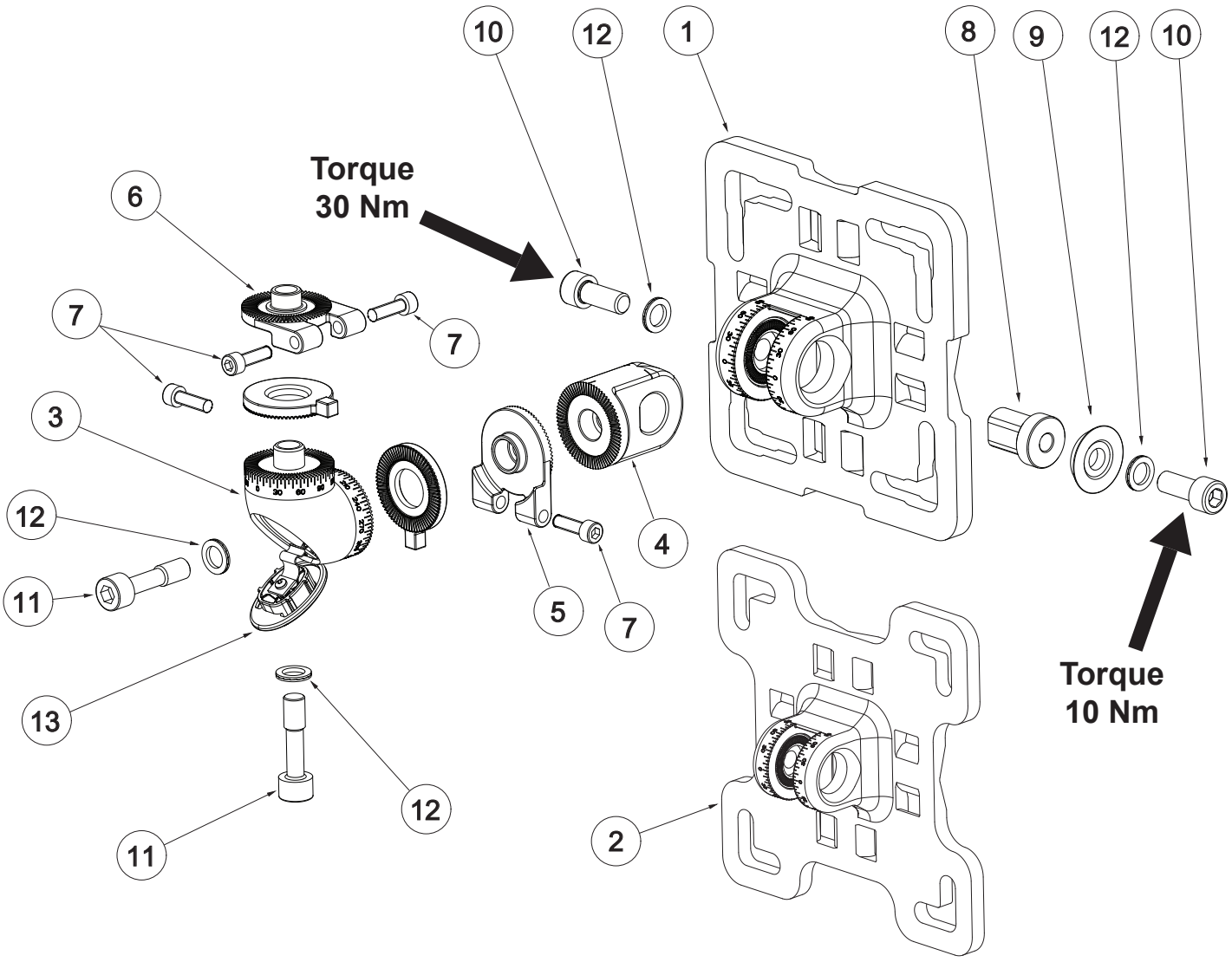

Figure 8. Universal Mounting Bracket exploded view

LEGEND:

Position	Description	Pcs.
1	Universal Mounting Bracket flange	1
2	Mount Plate Adaptor for Universal Mounting Bracket flange	1
3	Vertical pivot	1
4	Horizontal pivot	1
5	Vertical fine adjustment ring	1
6	Horizontal fine adjustment ring	1
7	Socket Head Screw M6x22	4
8	Keyed insert	1
9	Conical washer	1
10	Bolt M10x25	2
11	Captive Bolt M10x40	2
12	Nord lock washer M10	4
13	Bolt cover plate	1

5.6 Changing to Mount Plate Adaptor

In order to change the pivot between standard and larger Mount Plate Adaptor for Universal Mounting Bracket (enabling fitting to a larger pole or brackets), follow these instructions:

1. Unscrew both horizontal M10 bolts at the Universal Mounting Bracket (assembled and supplied as standard).
2. Remove the pivot.
3. Insert the pivot to the Mount Plate Adaptor for Universal Mounting Bracket flange (Figure 4).
4. Adjust the pivot in horizontal position and tighten both horizontal M10 bolts slightly.
5. Continue with instructions in the following section.

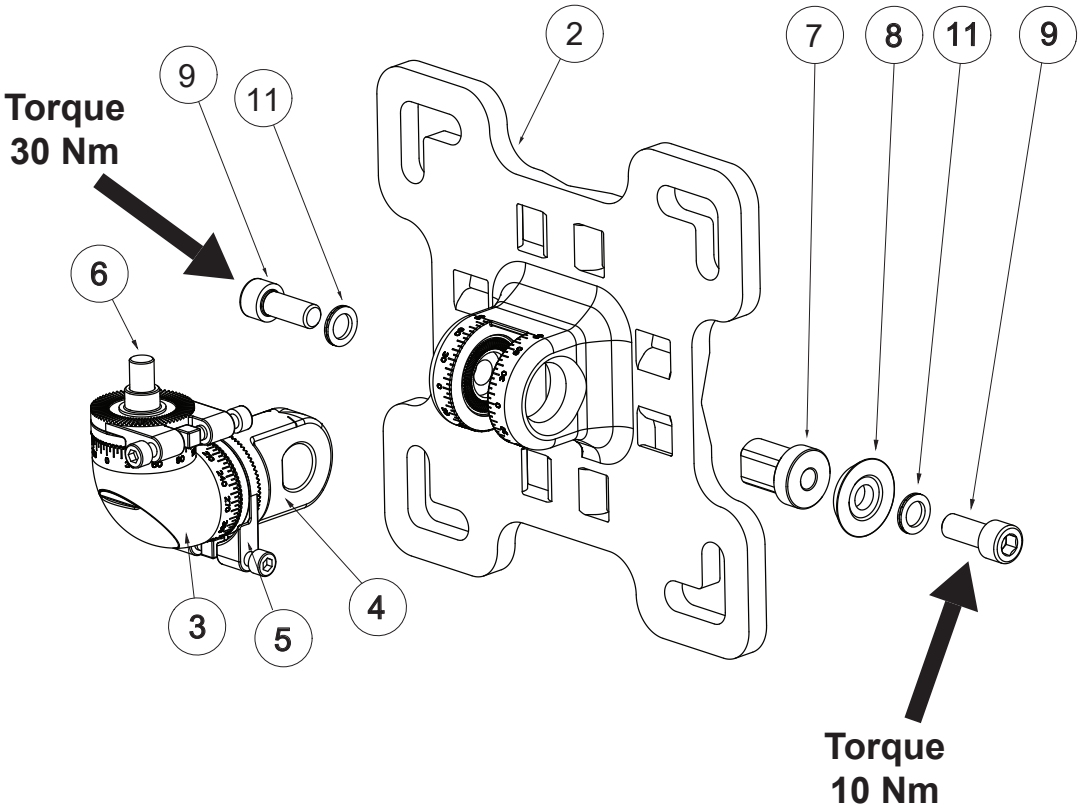

Figure 9. Changing Mount Plate Adaptor for Universal Mounting Bracket

5.7 Pole Mount Installation

5.7.1 Install Universal Mounting Bracket

For pole installation, use the optional Pole Mount Fixing Kit. Refer to Chapter 13 *Ordering Information* of this manual.

1. For poles 50 to 101 mm (2 to 4 inches) in diameter use the supplied Universal Mounting Bracket.
2. For larger poles 101 to 152 mm (4 to 6 inches) in diameter use the Mount Plate Adaptor for Universal Mounting Bracket (optional; Refer to Chapter 13 *Ordering Information* of this manual.)
3. Attach the assembled Universal Mounting Bracket (or Mount Plate Adaptor for Universal Mounting Bracket) to the pole. Align the bracket flange V-groove with the pole for a good fit. Fix the bracket with two U-bolts and four nuts with washers. Alternatively, fix the bracket using the Worm Drive Clips (Figure 5).
4. Unscrew both horizontal M10 bolts by 2-3 turns.
5. Adjust the pivot in horizontal position.
6. **IMPORTANT: First, tighten the left-facing** horizontal M10 bolt (Figure 5) to fix the pivot in horizontal position (torque 30 Nm/22.1 lb-ft).
7. **IMPORTANT: Second, tighten the right-facing** horizontal M10 bolt (Figure 5) to fix the pivot in horizontal position (torque 10 Nm/7.4 lb-ft).

⚠CAUTION

Use of Worm Drive Clips is NOT recommended for installation on moving objects, e.g., gas carriers.

Note
All Universal Mounting Bracket bolts are captive to ensure that they are not accidentally dropped during installation.

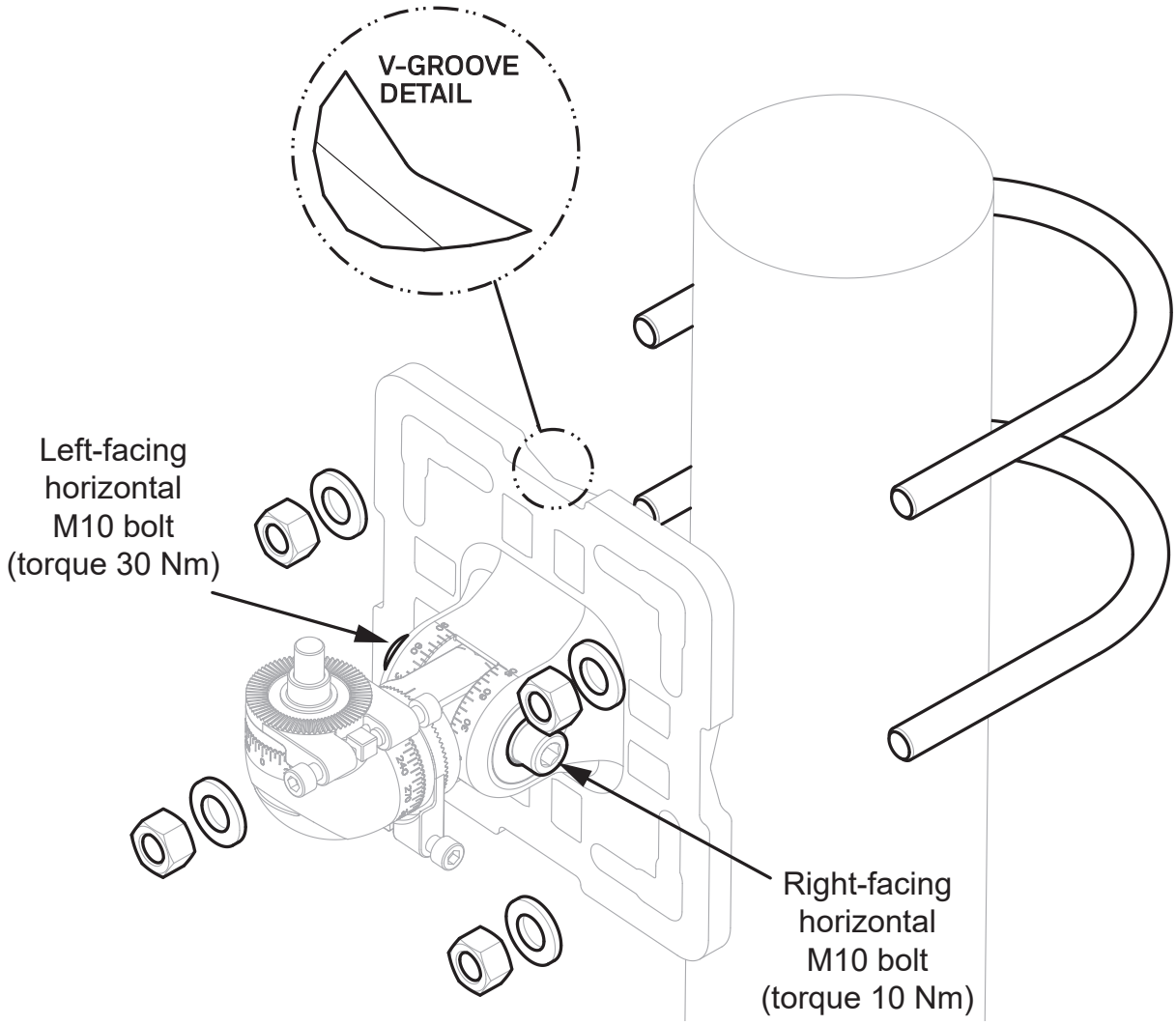

Figure 10. Universal Mounting Bracket fitment to pole with U-bolts

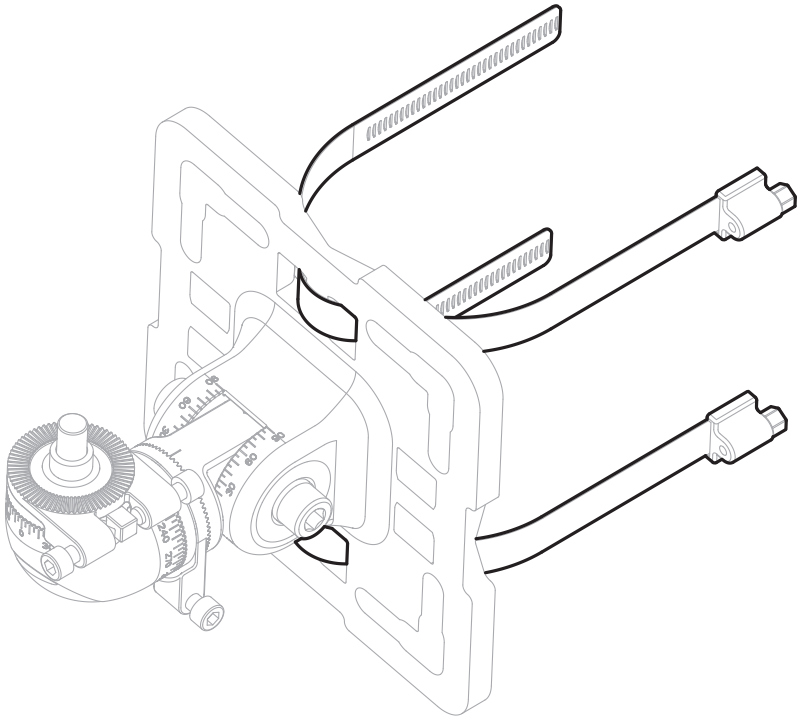

Figure 11. Universal Mounting Bracket fitment using Worm Drive Clips

5.8 Wall Mount Installation

For installation onto a wall, use M8 or M10 mounting bolts with washers (not supplied).

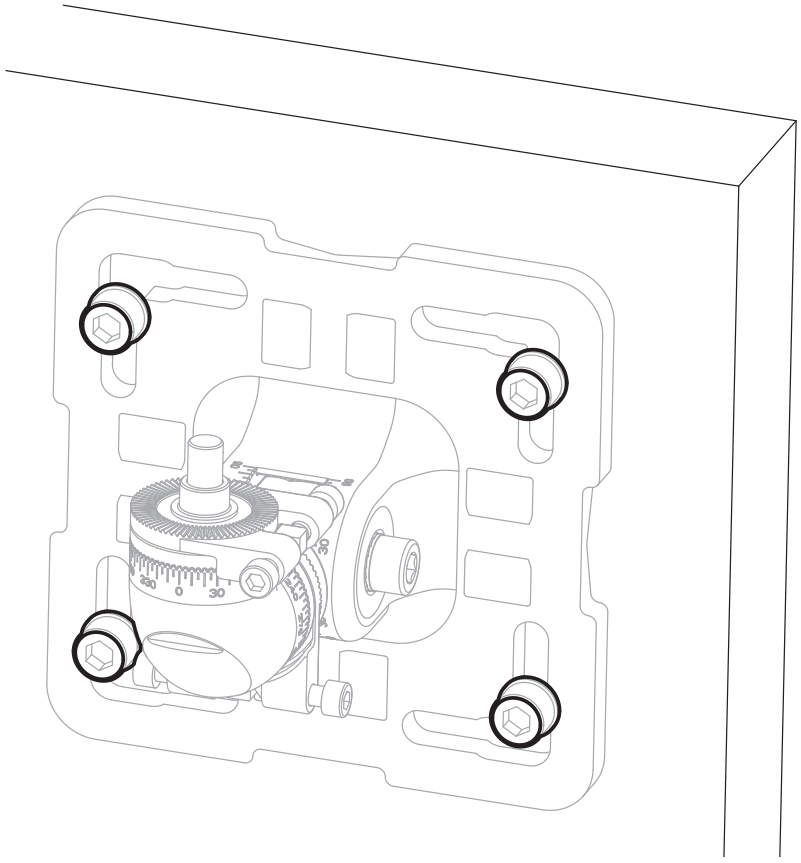

Figure 12. Wall mount installation

5.9 Assemble Cable Glands

Refer to the original manufacturer's assembly instructions for the particular cable gland type. The wiring compartment is certified to be able to use Ex d or Ex e glands to suite local requirements. Leave a service loop in the cable as per site standard procedures.

Note
Use certified cable glands and blanking plugs as per local standards.

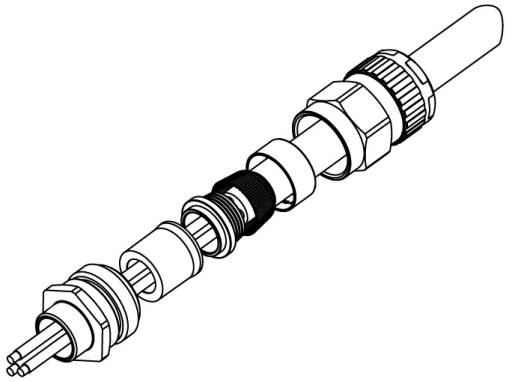

Figure 13. Example of cable gland

5.10 Connect Cable Glands to the transmitter and receiver

1. Fit the cable glands to the transmitter and receiver.
2. Fit stopping plugs to any unused cable entries.
3. Tighten the gland nuts and stopping plugs as per the manufacturer's instructions.

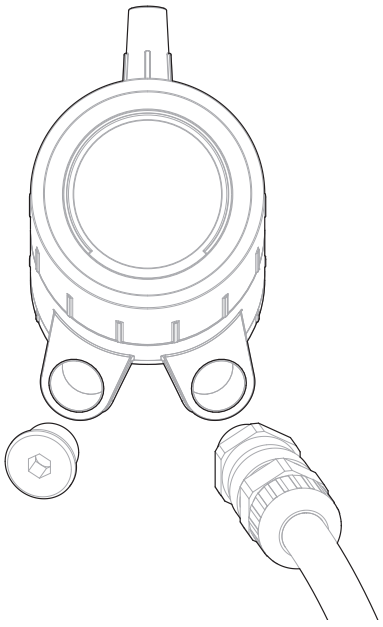

Figure 14. Connect cable glands to the instrument

5.11 Attach the instrument to the mount

⚠CAUTION

Ensure the M6 Fine Adjustment Screws do NOT get in the way of cable glands.

1. Begin with the transmitter
2. Remove the bolt cover plate (Figure 10).
3. Attach the transmitter to the top spigot of the Universal Mounting Bracket.
4. Hold the instrument body to prevent from tilting during assembly and contact-tighten the **spigot vertical M10 bolt.**
5. At this stage, only contact-tighten the **spigot horizontal M10 bolt**.

   Now repeat the same procedure with the receiver.

Note
The Adjustment Rings and M6 Fine Adjustment Screws will be set up later on during alignment.
Refer to Chapter 7 Alignment and Commissioning.

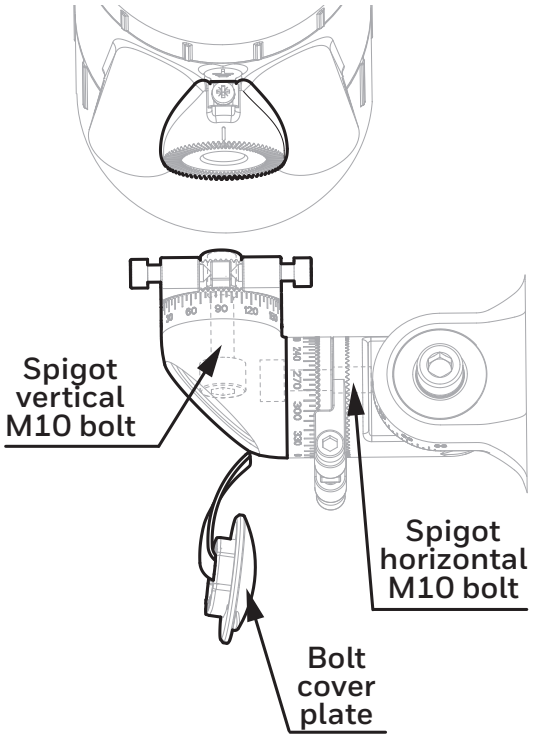

Figure 15. Attaching the instrument to the mount

5.12 Connect Wires to PCB Terminals

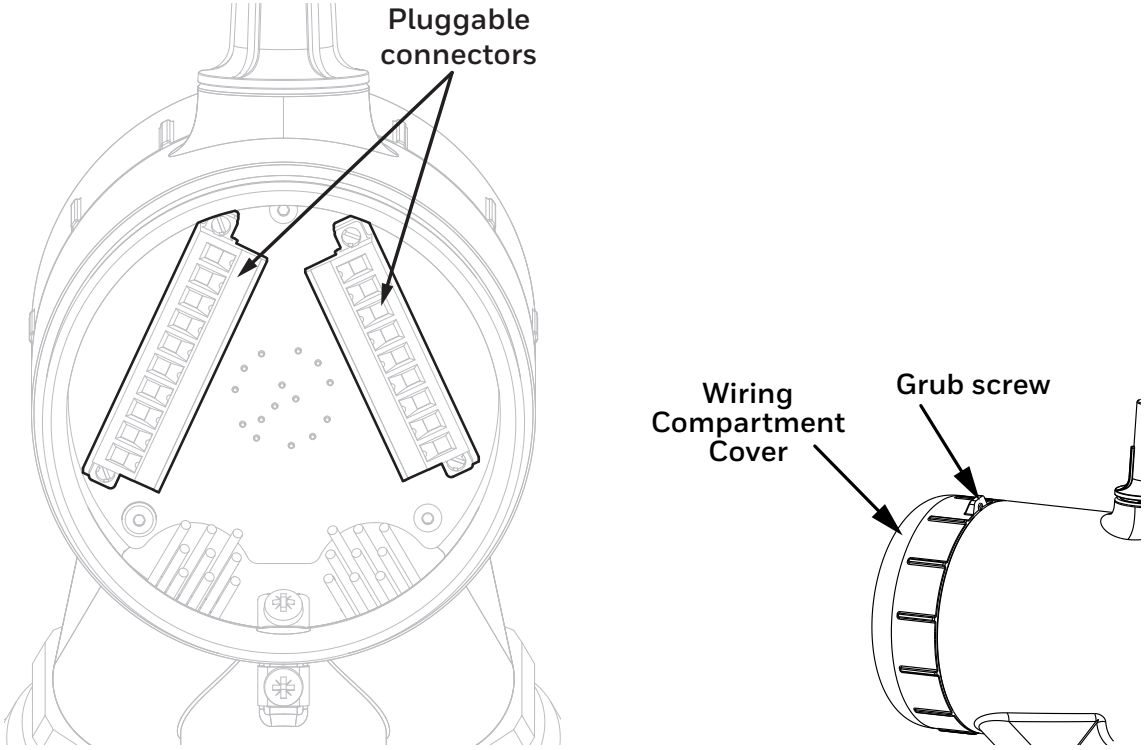

Figure 16. PCB Terminals

⚠CAUTION

Remove power from the transmitter and receiver before performing any electrical installation or maintenance.

⚠CAUTION

The equipment features pluggable connectors that are mechanically locked into position. These are not accessible by the user during normal operation.

1. Loosen the grub screw enough to allow the wiring compartment cover to be unscrewed.
2. Unscrew the transmitter wiring compartment cover.
3. Unscrew and remove the pluggable connectors.
4. Connect wires as per local procedures. The connectors are clearly identified. Refer to the diagrams and tables shown in Chapter 6 *Electrical Installation* of this manual for information on wiring.
5. Ensure that the O-rings on the transmitter body and in the wiring compartment cover are properly fitted and not damaged.
6. Ensure that the threads of the wiring compartment cover are clean of dust.
7. Screw on the wiring compartment cover.
8. Tighten the grub screw to a final torque of 1.1 Nm (0.81 lb-ft)
9. Initially align the transmitter in the desired direction of the receiver by eye.
10. **IMPORTANT:** First, tighten the **left-facing** horizontal M10 bolt to final torque of 30 Nm (22 lb-ft).
11. **IMPORTANT:** Second, tighten the **right-facing** horizontal M10 bolt to final torque of 10 Nm (7.4 lb-ft).
12. Measure and record the distance (in metres) between the transmitter and receiver units. This distance is required later in the alignment procedures.

At this point the transmitter and receiver will be positioned on their mountings so that their optical windows face each other:

5.13 Sunshade Installation

The procedure is the same for the transmitter and receiver.

1. Unscrew the antenna cover from the top of the instrument.
2. Fit the standard (supplied) or stainless steel sunshade (optional) onto the instrument.
3. Ensure the O-ring around the antenna is not damaged and is properly fitted.
4. Screw the antenna cover back.
5. Tighten the antenna cover to a final torque of 5 Nm (3.7 lb-ft).

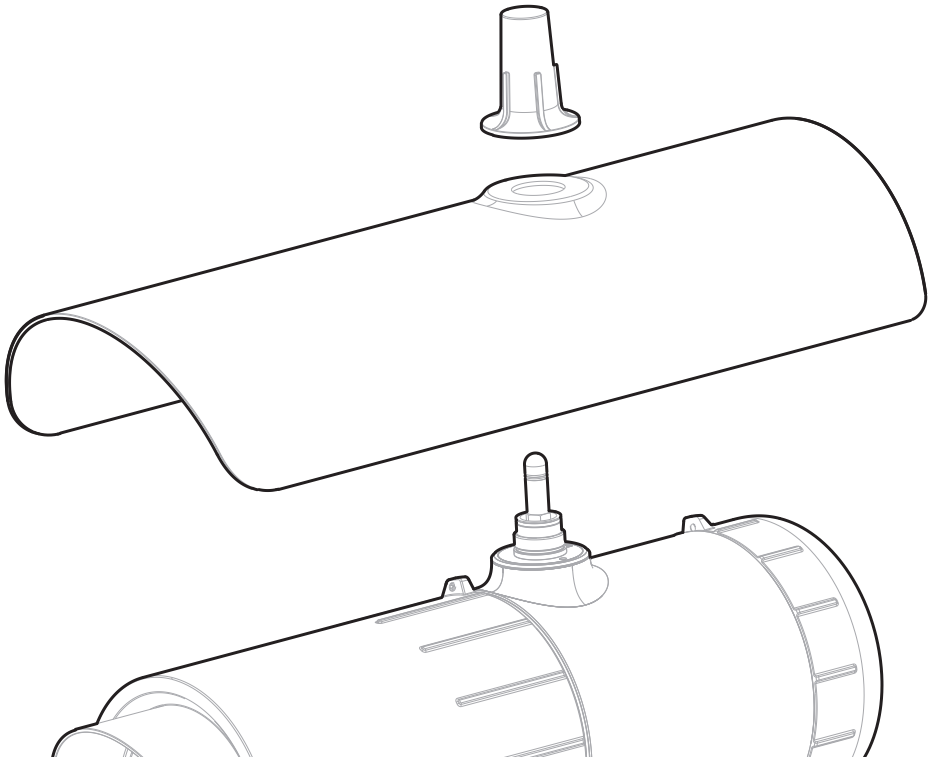

Figure 17. Sunshade and antenna cover

5.14 Transmitter / Receiver removal

Take the following steps to remove the transmitter or receiver:

1. Remove the bolt cover plate (Figure 13).
2. Hold the instrument body to prevent from tilting during disassembly and loosen the **spigot vertical M10 bolt.**
3. Remove the instrument from its Universal Mounting Bracket.

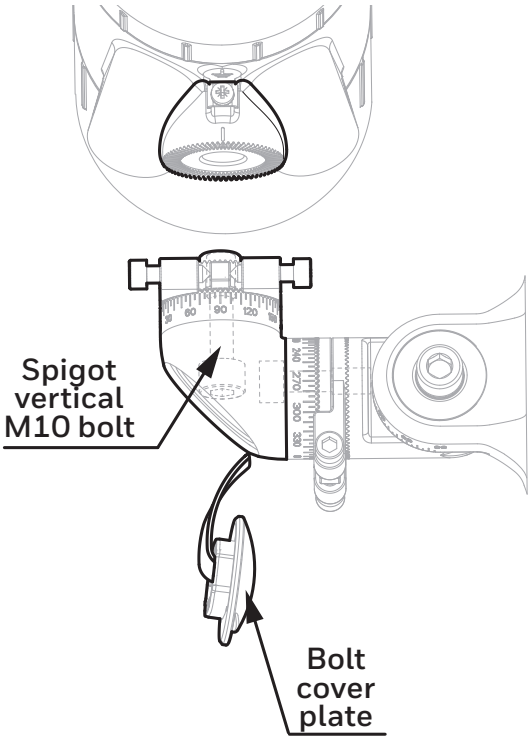

Figure 18. Removing the instrument from the mount

6 Electrical Installation

⚠CAUTION

Remove power from the transmitter and receiver before performing any electrical installation or maintenance.

6.1 Receiver Electrical Installation

6.1.1 Receiver Power Supply Requirements

The receiver requires a voltage supply of 18–32 Vdc (nominal 24 Vdc). Peak current for receiver is max. 0.6 A. Inrush current for receiver is 0.3 A for less than 20 ms.

Average (RMS) power consumption values:

Ambient Operating Temperature	Power consumption (W)
-55°C (-67°F) to -30°C (-22°F)	7.4
-30°C (-22°F) to +30°C (+86°F)	4.8
above +30°C (+86°F)	3.0

Cold Start / Heat-up power consumption values:

Ambient Operating Temperature	Power consumption (W)
below -30 °C (-22 °F)	15
above -30°C (-22°F)	10

The heat-up period lasts approx. 20 min. At lower ambient temperature the internal heater is active and power consumption may reach up to 15 W.

Ensure that the minimum required supply voltage 18 VDC is present at the receiver, taking into account the voltage drop due to cable resistance.

Note

Make allowance for the insertion loss resistance.

The maximum loop resistance in the field cable is calculated as follows:

$$R_{loop} = \frac{V_{controller} - V_{detector\ min}}{(Pmax\ /\ V_{detector\ \min})}$$

As an example, $V_{detector\ min}$ = 18 V; P_{max} = 10 W or 15 W (dependent on environmental conditions) $V_{controller}$ will depend upon the connected power supply or control system. Consult the manual of the given equipment for this information.

⚠CAUTION

The receiver 24 V power supply and 4-20 mA current loop power supply must be of an isolating type (galvanic isolation from mains, providing basic insulation) but does not need to be a Class II (SELV) power supply.

⚠CAUTION

If mains voltage is connected to more than one relay, all relays must be connected to the same phase of the mains network. Using different phases is not allowed.

⚠CAUTION

Temperature rating of the cable connected to the terminal shall be suitable with respect to the installation environment.

6.1.1.1 Receiver Internal Battery Cell

A primary cell featuring an expected operating life of 10 years is fitted internally. This is not accessible and replacement must only be conducted by an authorized service centre.

6.1.2 Receiver 4–20 mA Current Loop

The receiver provides a 4–20 mA current loop with HART Communication which can be user configured as a Sink, Source (3–Wire) or Isolated (4–Wire) electrical interface, based on installation requirements.

Depending on configuration, the 4–20 mA current loop output can provide:

- discrete indication of operating modes (Normal operation, Pre-alarm, Alarm) and special states (Fault, Warning, Inhibit, Over-range)
- proportional output to gas concentration and a discrete indication of special states (Fault, Warning, Inhibit, Over-range).

Searchline Excel Plus & Searchline Excel Edge features HART communications to provide access to the receiver from a control system or handheld device for the purpose of configuration and to provide status and diagnostic information.

The total load resistance for the 4–20 mA current loop shall be less than 600 Ω, including the resistance of the 4–20 mA cable and input impedance of the equipment to be connected. To ensure reliable HART communications, the minimum loop resistance is 250 Ω. If HART communication is not required, the minimum loop resistance is 100 Ω.

If the 4–20 mA current loop is not used, a jumper must be connected between 4–20 mA+ (terminal 5) and 24V DC+ (terminal 8) and a load resistor must be connected between 4–20 mA- (terminal 6) and 0V DC (terminal 9).
It is recommended to use a 470 Ohm, 1/4 W resistor (250 to 400 Ω if HART is required). With the 4–20 mA current loop configured this way the HART facility can still be used with a HART handheld unit using terminals 20 and 21 inside the wiring compartment. A HART DTM is available for Searchline Excel Plus and Searchline Excel Edge.

⚠CAUTION

The maximum permissible mA loop voltage is 32 VDC and the maximum current is 22 mA.

6.1.3 Relays

The receiver features 3 SPDT relay outputs for alarm and fault indication. Relay 1 is for alarm level 1, relay 2 is for alarm level 2, and relay 3 indicates faults. The fault relay is normally energized and when energized indicates proper operation (no faults present).

In the event of power failure or fault, the COM-NO connection will open. If required, the fault relay may be configured as normally de-energized.

6.2 Receiver Connections / Wiring Diagram

Note
24 V pins number 7 & 8 and 0 V pins number 9 & 10 are internally linked.

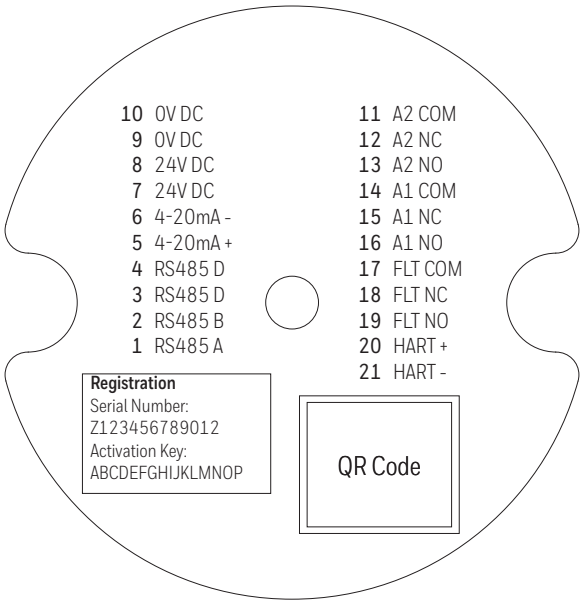

Figure 19. Receiver Terminal Connector Label

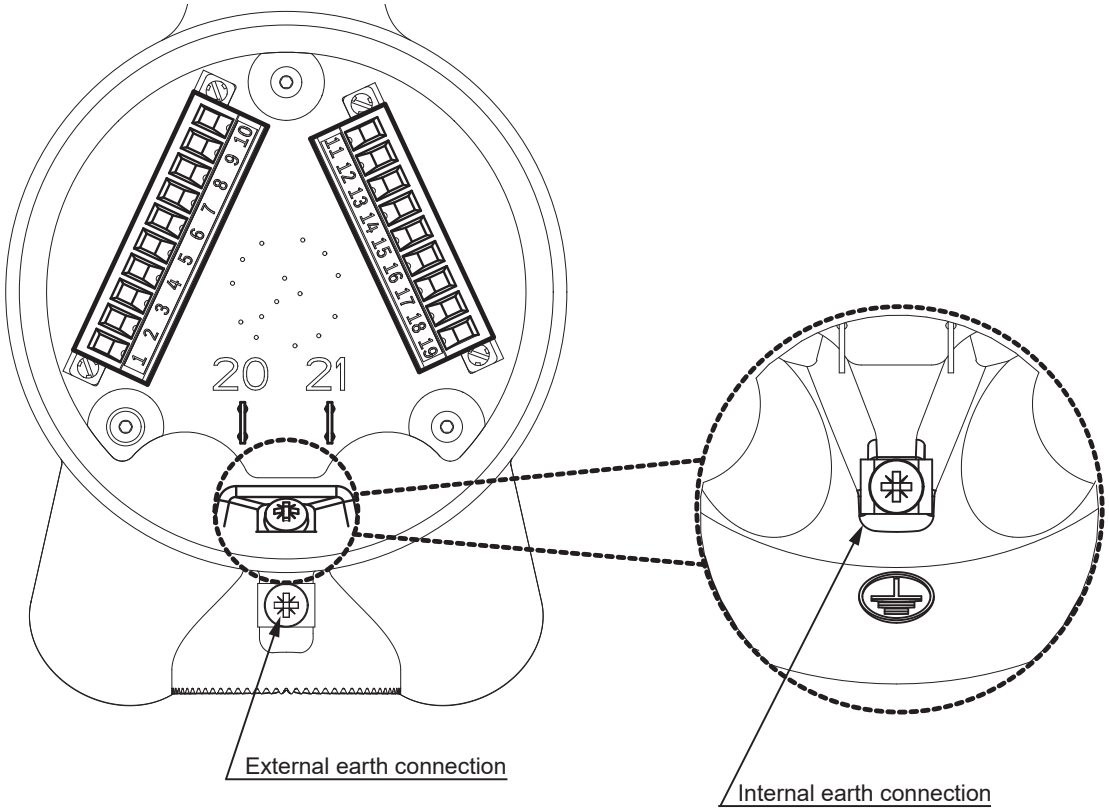

Figure 20. Receiver Terminal Wiring Compartment

6.2.1 Receiver Terminal Wiring Description

Number	Marking	Description
1	RS485 A	RS-485 A (positive)
2	RS485 B	RS-485 B (negative)
3	RS485 D	RS-485 D (cable shielding)
4	RS485 D	RS-485 D (cable shielding)
5	4-20mA+	mA signal +
6	4-20mA-	mA signal -
7	24V DC	Input power +
8	24V DC	Input power +
9	0V DC	Input power 0V
10	0V DC	Input power 0V

Number	Marking	Description
11	Alarm 2 COM	Alarm Relay 2 COM contact
12	Alarm 2 NC	Alarm Relay 2 NC contact
13	Alarm 2 NO	Alarm Relay 2 NO contact
14	Alarm 1 COM	Alarm Relay 1 COM contact
15	Alarm 1 NC	Alarm Relay 1 NC contact
16	Alarm 1 NO	Alarm Relay 1 NO contact
17	Fault COM	Fault Relay COM contact
18	Fault NC	Fault Relay NC contact
19	Fault NO	Fault Relay NO contact
20	HART+	HART handheld temporary connection (positive)
21	HART-	HART handheld temporary connection (negative)

Unused conductors must be suitably terminated. Wiring must be in accordance with local, national and company regulations. Exposed or bare conductors must be avoided.

⚠CAUTION

The maximum permissible mA loop voltage is 32 VDC and the maximum current is 22 mA.

Note
Do not reverse the receiver power supply connections. This will not damage the unit, however, the unit will not operate.

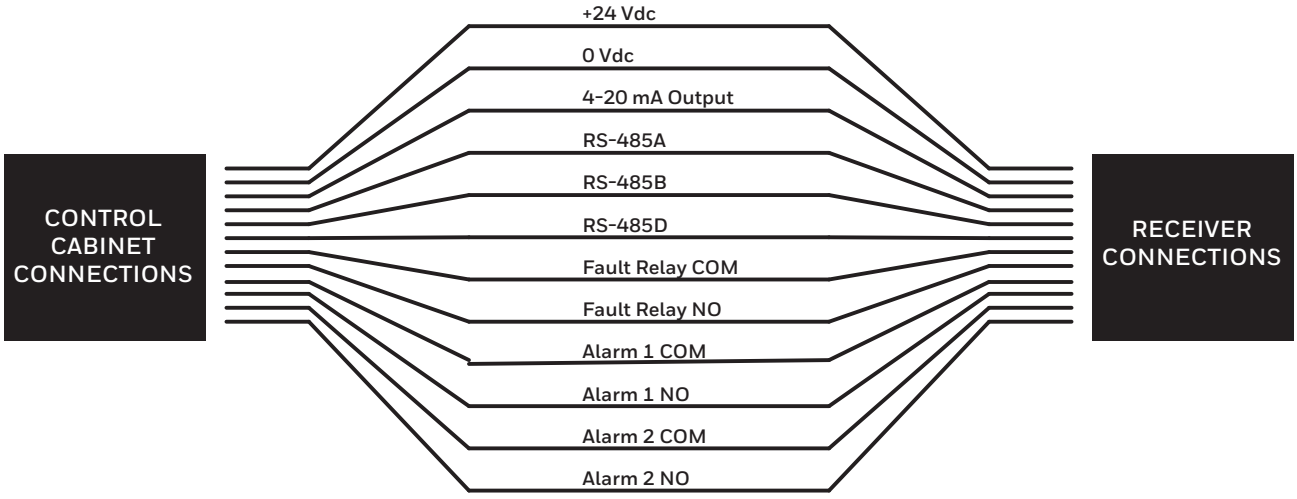

Figure 21. Receiver Connections

6.2.2 Power Consumption of Excel Components (Typical)

Receiver calculation = 1000 x 6.75 Ω / (Ω / km)				
	Typical cable resistance		Maximum cable length	
Cable	Ω / km	Ω / mi	Meters	Feet
1.5 mm² (16 AWG)	12.7	20.4	531	1,742
2.0 mm² (14 AWG)	10.1	16.3	668	2,191
2.5 mm² (13 AWG)	8.0	12.9	844	2,769
AWG is nearest equivalent			*example is for a nominal 24 VDC supply	

Note
The figures given in the table above are typical ratings that may vary from cable to cable. Always measure your own cable and device resistances and your power supplies to ensure accuracy in your calculations.

6.2.3 Connection for mA loop Configuration as Current Source

⚠CAUTION

Ensure that jumper wires are installed applicable for the selected mA current loop configuration.

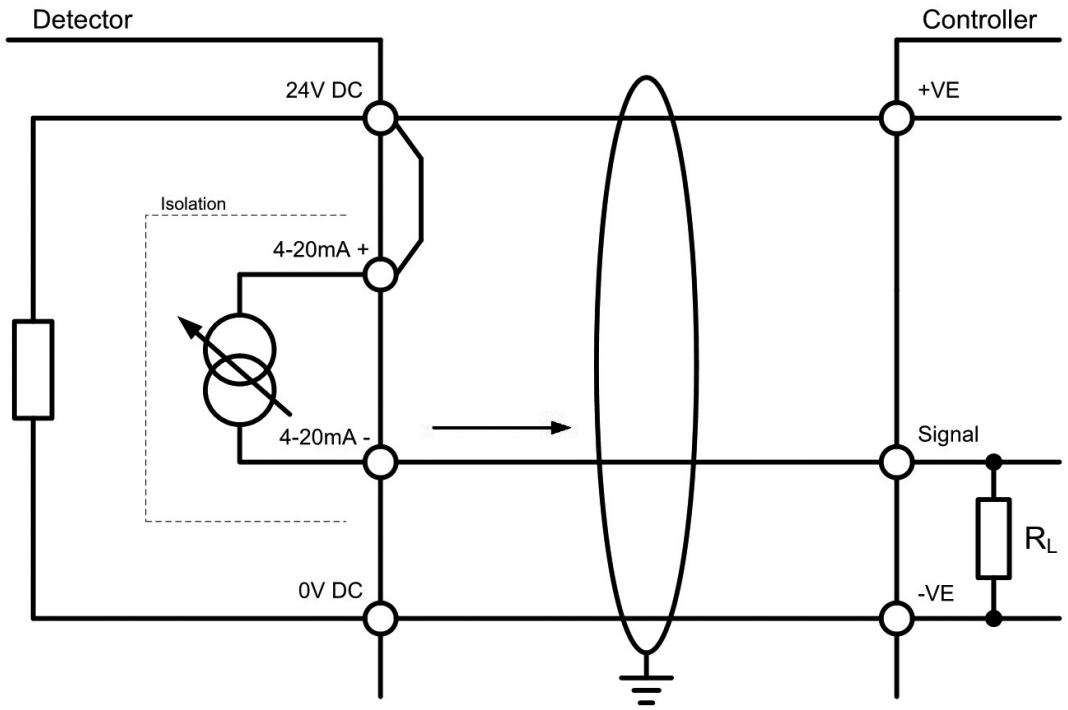

Figure 22. mA loop configuration as current source

6.2.4 Connection for mA Loop Configuration as Current Sink

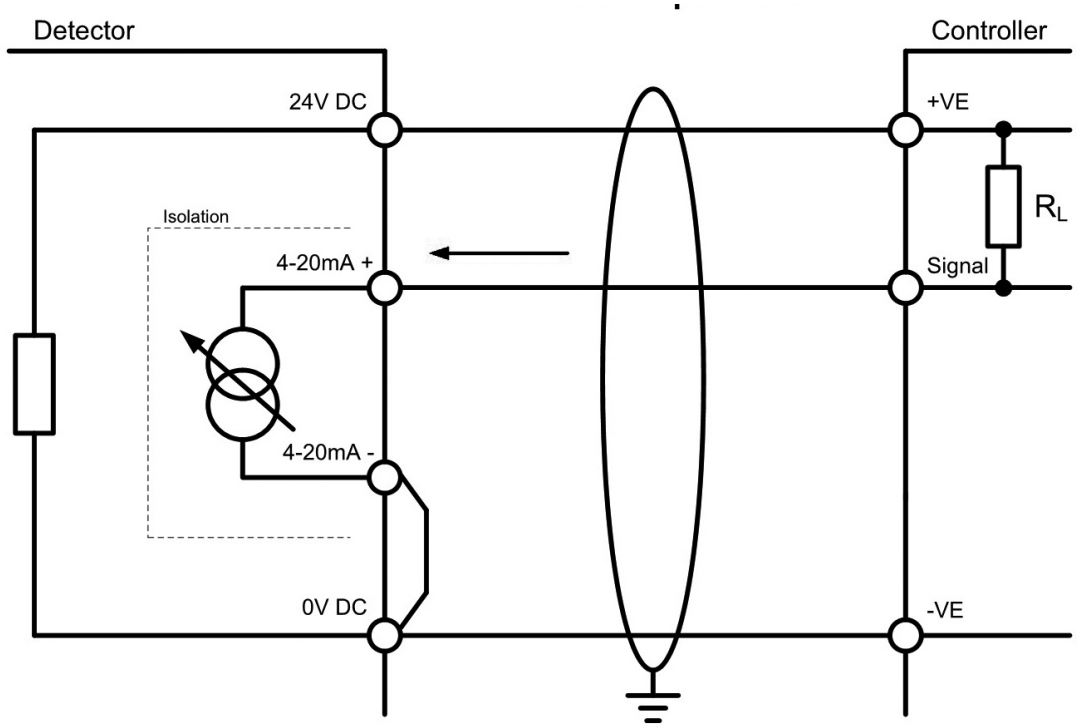

Figure 23. mA loop configuration as current sink

6.2.5 Connection for mA Loop Configuration as Isolated Output

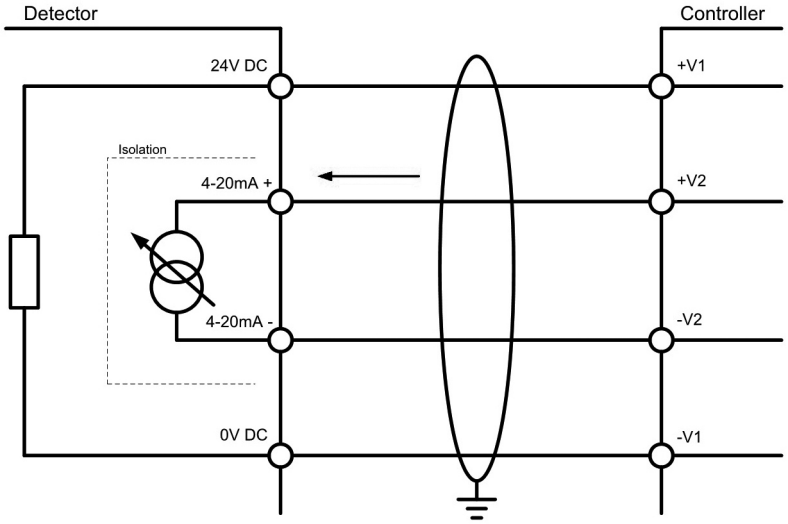

Figure 24. mA loop configuration as isolated output

6.2.6 Cabling Recommendations

The cable used must be appropriate for the hazardous area classification and must meet local, national and company regulations. The use of industrial grade, screened field cable is recommended.

An example may be a 3–core copper cable with screen (minimum 90% coverage) and suitable mechanical protection (e.g. steel wire armour) to suit an M25 or 3/4" NPT gland entry or conduit, suitable when mA loop and Modbus are used while relay outputs are not utilized.

The allowable conductor size for the terminals is 0.25–2.5 mm² (24–12 AWG). The terminals will accept only wire sizes (solid-core or stranded) in this range. The temperature rating of the conductors and cable glands should be greater than 80 °C (176 °F). The terminals should be torqued between 0.5 Nm to 0.6 Nm (0.368-0.442 lb.ft).

Ensure that the cable gland is installed correctly and fully tightened. All unused cable/conduit entries must be sealed with a suitable certified blanking plug. Use appropriate and certified cable glands, adapters and/or cable fittings to meet local standards.

6.2.7 Earthing Recommendations

⚠CAUTION

Any earthing regime employed must avoid earth loops.

The following information is provided to assist with proper earthing of the transmitter and receiver:

- The transmitter and receiver have both INTERNAL and EXTERNAL earth points provided (see *Electrical Connections*). This is to facilitate connection of the instrument to protective earth.

  The INTERNAL earth point is marked with ground symbol in circle ⏚ It shall be used for the equipment grounding connection. Internal earth must be at least equal in mm^2 to the incoming power conductors.

  The EXTERNAL earth point is marked with ground symbol without circle ⏚ It provides a supplementary bonding connection, which provides facility for connection of field wiring conductors of at least $4mm^2$.

- Field cable screens should be connected to instrument earth at the control room. The other end of the field cable screen should be suitably terminated or isolated. It should not be connected to internal earth point.

6.2.8 Modbus

Refer to Chapter 10 *Communications* of this manual for more information on Modbus.

6.2.9 Connection to Honeywell OELD

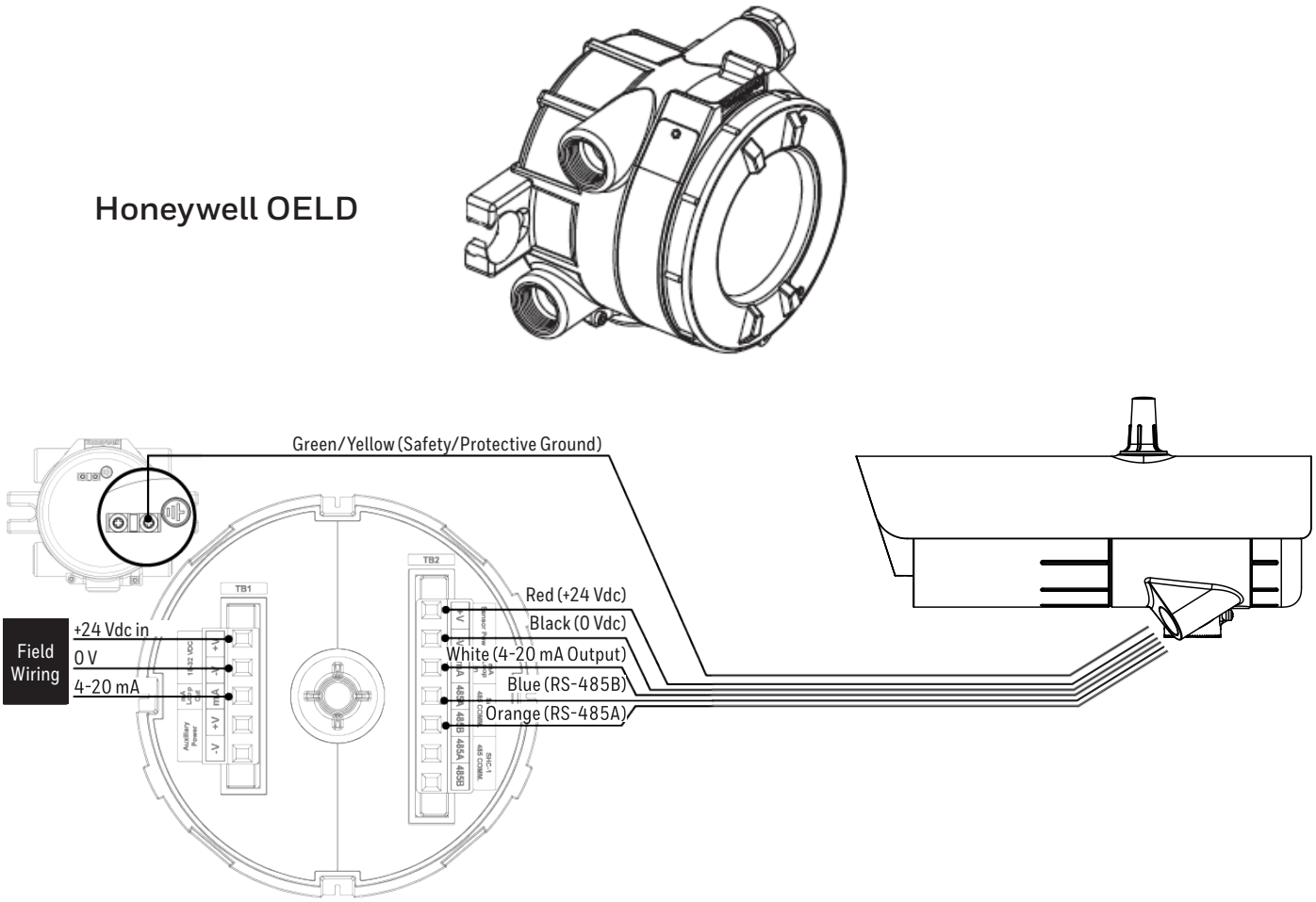

Figure 25. Connection to Honeywell OELD

⚠WARNING

Connection between Searchline Excel Plus & Edge and the OELD Local Display unit must be made in accordance with the recognized standards of the appropriate authority in the country concerned. Specifically use blanking plug in conduit systems and blanking gland in armoured cable systems.

Cable connection to OELD must be set in compliance with IEC 60079-14:2013 Ed.5:

1. the connection cable shall be at least 3 m in length.
2. use of barrier cable glands in compliance with IEC 60079-1 and certified as equipment.
3. use of cables in compliance with IEC 60079-1 Article 9.3.2 (a).

OELD Connection for mA loop Configuration as Current Source

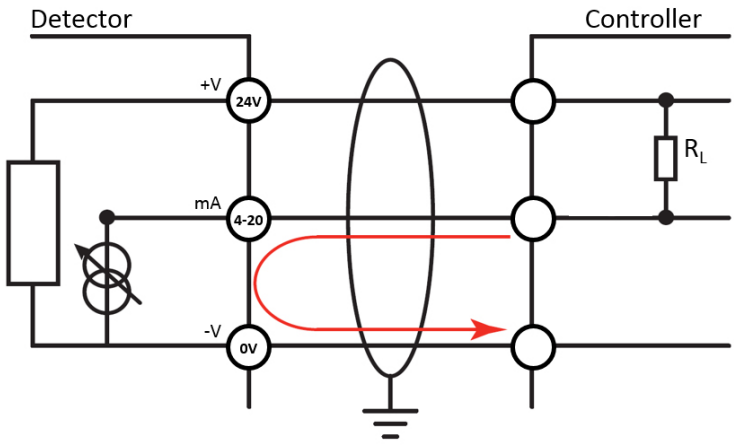

Figure 26. mA loop configuration as current source

OELD Connection for mA Loop Configuration as Current Sink

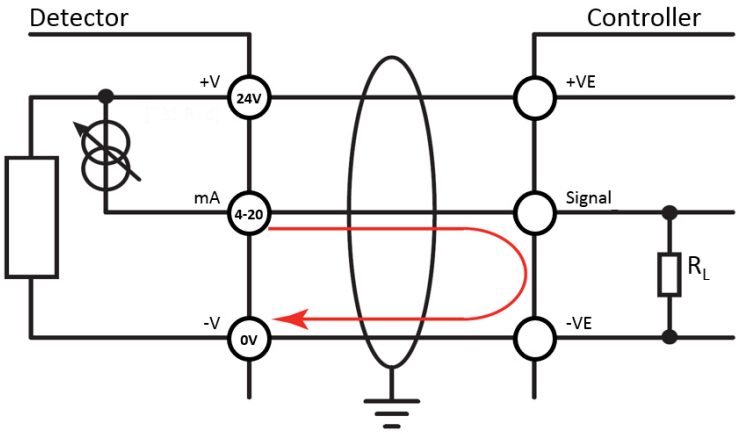

Figure 27. mA loop configuration as current sink

⚠CAUTION

The earth bonding arrangement must ensure that the maximum peak voltage between OELD case earth and any field cable conductor is less than 350V. Voltages in excess of this can cause permanent damage to the OELD's internal RFI protection filters.

6.3 Transmitter Electrical Installation

6.3.1 Transmitter Power Supply Requirements

The transmitter requires a voltage supply of 18–32 Vdc (nominal 24 Vdc). Peak current for transmitter is max. 0.7 A. Inrush current for transmitters is 0.5 A for less than 20 ms.

Average (RMS) power consumption values:

Ambient Operating Temperature	Power consumption (W)
-55°C (-67°F) to -30°C (-22°F)	11.8
-30°C (-22°F) to +30°C (+86°F)	5.6
above +30°C (+86°F)	3.8

Cold Start / Heat-up power consumption is max. 17 W. The heat-up period lasts approx. 20 min.

Ensure that the minimum required supply voltage 18 VDC is present at the transmitter, taking into account the voltage drop due to cable resistance.

⚠CAUTION

Temperature rating of the cable connected to the terminal must be suitable with respect to the installation environment.

Note
Make allowance for the insertion loss resistance.

The maximum loop resistance in the field cable is calculated as follows:

$$R_{loop} = \frac{V_{controller} - V_{detector\ min}}{I_{detector}}$$

As an example, $V_{detector\ min}$ = 18 V; P_{max} = 17 W; $V_{controller}$ will depend upon the connected power supply or control system. Consult the manual of the given equipment for this information.

6.3.2 Transmitter Connections / Wiring diagram

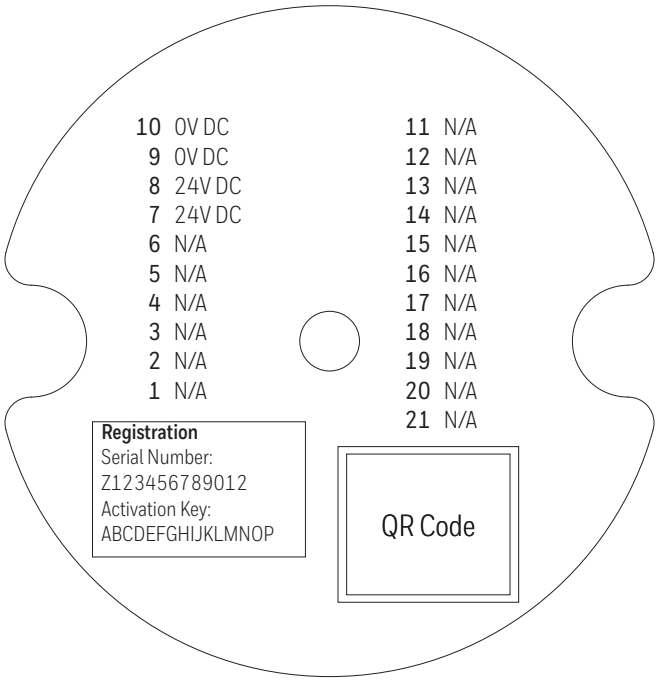

Figure 28. Transmitter Terminal Connector Label

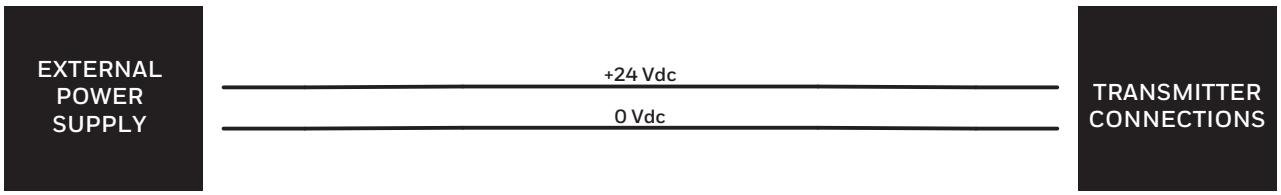

Figure 29. Transmitter Connections

Note
The transmitter is immune against accidental reverse polarity connection of power. Refer to Section 6.3.5 *Transmitter with LED Indicator Disabled*.

Note:
Wiring must be done in accordance with local, national and/or company regulations. Exposed, bare conductors must be avoided.

6.3.3 LED Indicator Switch Off

For installations where LED Indicator operation is not required, the LED Indicator can be switched off by reversing polarity of the power supply wiring. This will only disable the LED Indicator, other transmitter functions will not be affected.

6.3.4 Transmitter with LED Indicator enabled

When connected as shown in table below, the transmitter operates with the LED Indicator in green.

Number	Marking	Color	Description
1	n/a	n/a	n/a
2	n/a	n/a	n/a
3	n/a	n/a	n/a
4	n/a	n/a	n/a
5	n/a	n/a	n/a
6	n/a	n/a	n/a
7	24V DC	Red	Input power +
8	24V DC	Red	Input power +
9	0V DC	Black	Input power 0V
10	0V DC	Black	Input power 0V

Number	Marking	Color	Description
11	n/a	n/a	n/a
12	n/a	n/a	n/a
13	n/a	n/a	n/a
14	n/a	n/a	n/a
15	n/a	n/a	n/a
16	n/a	n/a	n/a
17	n/a	n/a	n/a
18	n/a	n/a	n/a
19	n/a	n/a	n/a
20	n/a	n/a	n/a
21	n/a	n/a	n/a

Transmitter Terminal Wiring with LED Indicator enabled

6.3.5 Transmitter with LED Indicator disabled

Alternatively, power supply may be wired in reversed polarity to disable the LED Indicator as described in table below. The transmitter operates without visual status indication.

Number	Marking	Color	Description
1	n/a	n/a	n/a
2	n/a	n/a	n/a
3	n/a	n/a	n/a
4	n/a	n/a	n/a
5	n/a	n/a	n/a
6	n/a	n/a	n/a
7	24V DC	Red	Input power 0V
8	24V DC	Red	Input power 0V
9	0V DC	Black	Input power +
10	0V DC	Black	Input power +

Number	Marking	Color	Description
11	n/a	n/a	n/a
12	n/a	n/a	n/a
13	n/a	n/a	n/a
14	n/a	n/a	n/a
15	n/a	n/a	n/a
16	n/a	n/a	n/a
17	n/a	n/a	n/a
18	n/a	n/a	n/a
19	n/a	n/a	n/a
20	n/a	n/a	n/a
21	n/a	n/a	n/a

Transmitter Terminal Wiring with LED Indicator disabled (power supply in reversed polarity)

Note

Only the transmitter provides the option of power supply reversed polarity. The receiver cannot be configured in such way.

7 Alignment and Commissioning

⚠WARNING

Do not attempt to view the sun or excessively bright light through the Searchline Excel Alignment Scope.

⚠CAUTION

Searchline Excel Plus & Searchline Excel Edge should only be installed by fully trained personnel, trained by Honeywell Analytics or an authorised Honeywell Analytics trainer.
Detailed information concerning installation, alignment and commissioning is provided in this manual.

⚠CAUTION

Searchline Excel Plus & Searchline Excel Edge are explosion protected by a certified, flameproof enclosure. Carefully read the safety warnings, cautions and certification details in this manual. Ensure that they have been complied with, before and during the installation.

7.1 General

To ensure optimum performance the transmitter and receiver must be accurately coaxially aligned with a clear line of sight between them.

⚠CAUTION

The transmitter and receiver must be installed in horizontal level (+/- 45 degrees tilt).

⚠CAUTION

Do NOT install the transmitter and receiver in vertical position towards each other.
Do NOT install the transmitter and receiver perpendicular to the mounting bracket.

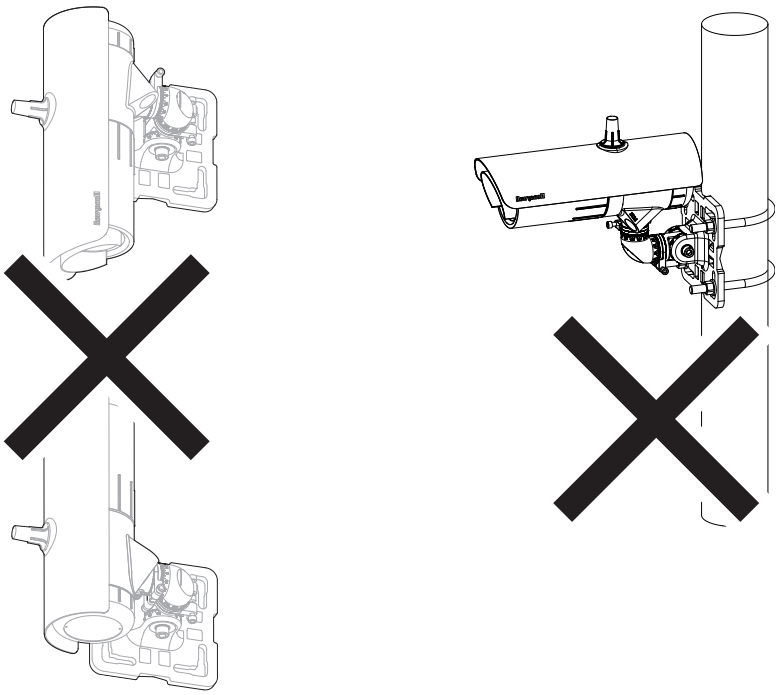

The transmitter is first aligned with the receiver using a Searchline Excel Alignment Scope attached to the body of the transmitter.

This Searchline Excel Alignment Scope is then fitted to the receiver and the alignment procedure repeated.

The IS Handheld Unit is connected to the receiver via Bluetooth and runs the Honeywell Fixed Platform App to finally commission the equipment and is used to optimally set-up the instrument. All settings are stored along with a maintenance report.

This procedure can be performed by a single capable and trained technician.

Each Searchline Excel Plus & Searchline Excel Edge transmitter and receiver features a Universal Mounting Bracket that allows both course and fine mechanical adjustment to simply adjust the horizontal and vertical aim as shown below.

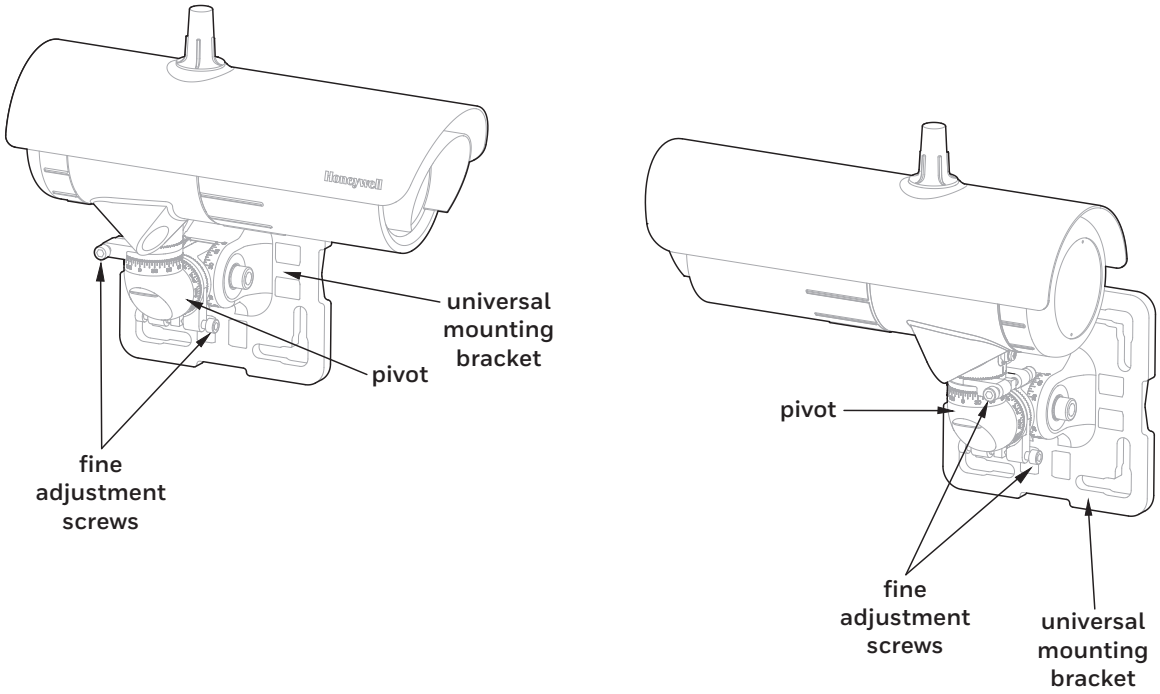

Figure 30. Searchline Excel Plus & Edge transmitter and receiver general view

Initial coarse mechanical adjustment is first carried out by means of 2 degrees of freedom movement to coaxially align the transmitter and receiver pair using the Alignment Scope, followed by hex bolt locking.

Fine adjustment is then achieved by means of the fine adjustment ring on the Universal Mounting Bracket enabling simple fine aiming and locking, utilizing the Alignment Scope.

⚠CAUTION

The maximum permissible angle of misalignment between transmitter and receiver is +/- 0.8 deg.

After initial mechanical setup the Searchline Excel Plus or Searchline Excel Edge is powered up. The associated Handheld Unit is remotely connected to the receiver. Using the Honeywell Fixed Platform App, the operating range (the distance between the front faces of the transmitter and the receiver) is entered. The mechanical alignment is then verified electronically.

Searchline Excel Plus & Searchline Excel Edge cannot be put into service unless the alignment has been confirmed successfully.

7.2 Equipment Required for Alignment and Commissioning

Note

To be able to connect to the receiver, user must be registered to the Honeywell User Management Suite (UMS) and have the Honeywell Fixed Platform App installed to a suitably-approved mobile device. Refer to Chapter 7.6.1 *Connect to Honeywell Fixed Platform App via Mobile Device*.

1. Alignment Scope – suitable for both Searchline Excel Plus & Searchline Excel Edge.
2. IS Handheld Unit – refer to Chapter 13 *Ordering Information*.
3. Functional Test Filters – refer to Chapter 9 *Maintenance*.
4. Toolkit

Notes
1. Ideally, carry out the alignment procedure on a clear day with good distance visibility.
2. Get familiar with the workings of the adjustable parts of the Universal Mounting Bracket before proceeding with the alignment procedure.

7.3 Alignment Scope

The Alignment Scope is used for both Searchline Excel Plus and Searchline Excel Edge and covers both receiver and transmitter alignment. The Alignment Scope consists of an optical barrel and a viewing arm. The eyepiece has adjustment to enable optimal eye relief and easy use.

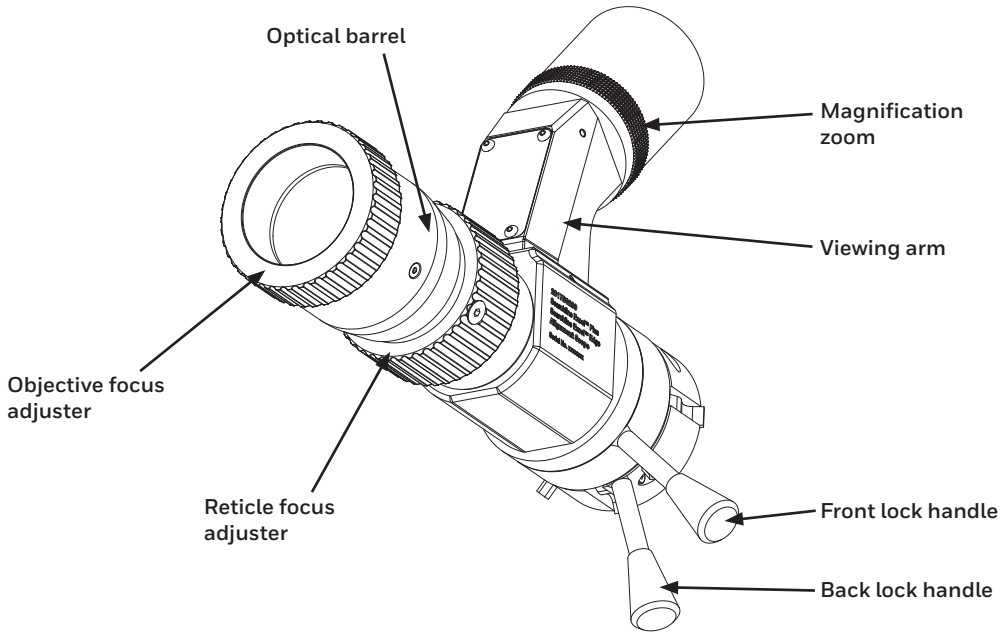

Figure 31. Alignment Scope general view

⚠CAUTION

Do NOT adjust the aiming pattern using the Alignment Scope's elevation and windage adjusters as they have been factory set.

⚠CAUTION

If the Alignment Scope is damaged or misaligned it must be returned to the factory for repair or realignment.

⚠CAUTION

Keep the Alignment Scope and optics clean of dust to avoid scratches on the transmitter/receiver windows.

Notes
1. The Alignment Scope uses the same coaxial datum as used when the instrument was aligned in the factory to ensure precise field alignment.
2. The Alignment Scope is specifically designed for simple and repeatable optimal alignment of the transmitter and receiver and features a zoom function to enable efficient alignment.

7.4 Basic Alignment

The basic procedure for aligning the transmitter and receiver is the same. The Searchline Excel Alignment Scope is used for both Searchline Excel Plus & Searchline Excel Edge and is simply attached to the front face of the transmitter and receiver (see Figure 34) and must be fitted to each of the instruments in turn, starting with the transmitter.

Ensure the transmitter and receiver face each other across the area. Follow the procedure described below.

Note:
Optical alignment may be carried out with power applied.

⚠CAUTION

At start, ensure the Front lock handle is rotated counter-clockwise to its maximum and the Alignment Scope's spacers are precisely aligned with the instrument's cowling gap before locking the fitting. Refer to Figure 32.

1. Ensure the Front lock handle is rotated counter-clockwise to its maximum (see Figure 32). This will pull the Alignment Scope's slots in.

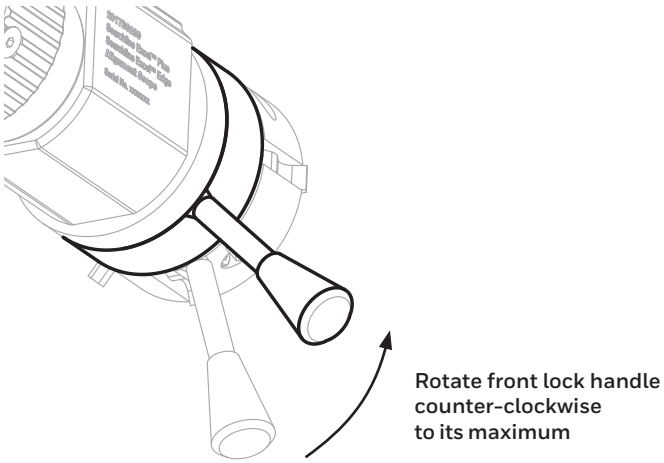

Figure 32. Setting the initial position of Front lock handle

2. Align the Alignment Scope's **two spacers** with the instrument's **cowling gap** (see Figure 33).

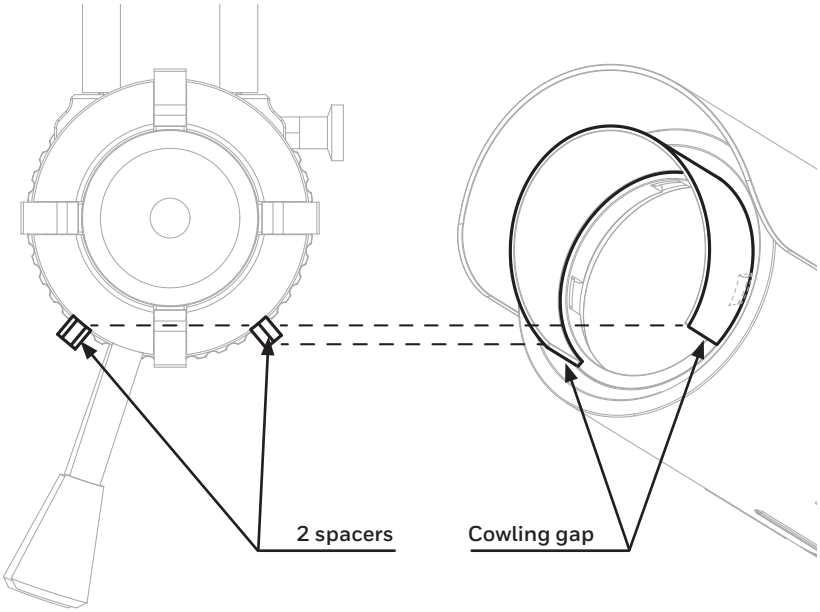

Figure 33. Aligning spacers to cowling gap

3. Push the Alignment Scope fully home onto the **four slots** on the instrument (see Figure 34).

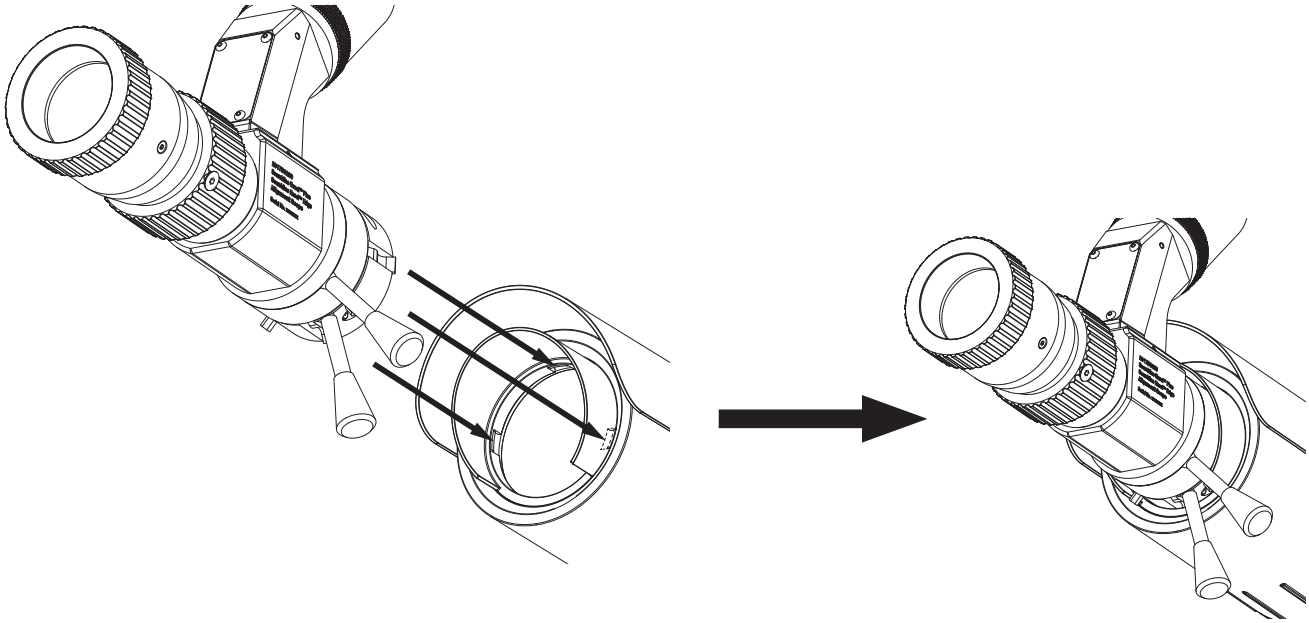

Figure 34. Fitting the Alignment Scope onto four slots

4. Use one hand to rotate the Alignment Scope to a comfortable viewing position and hold it in that position. A horizontal viewing position is the easiest to interpret.

Note
If an extended sunshade is fitted to the transmitter/receiver, it reduces the angle of rotation for the Alignment Scope to 270° degrees.

5. With the other hand use Alignment Scope's **Front lock handle** and rotate it 90° degrees clockwise (see Figure 35). This will securely lock the Alignment Scope onto the instrument.

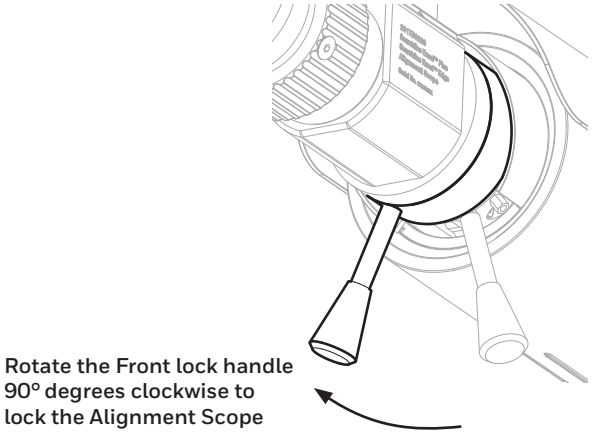

Figure 35. Locking the Alignment Scope

6. Set the **Viewing arm** position.

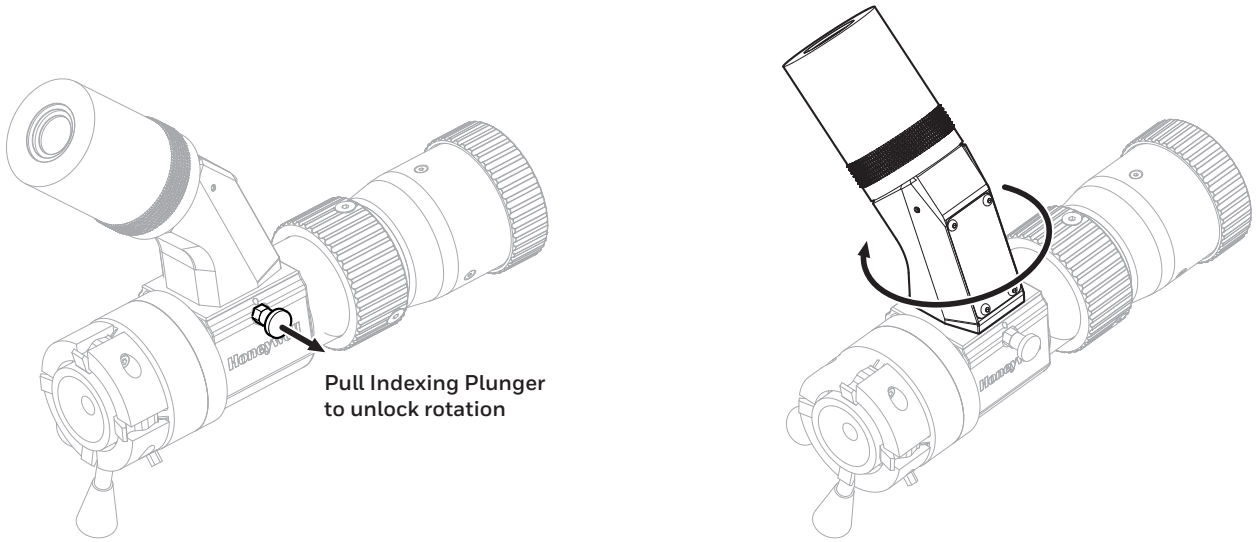

Figure 36. Set the Viewing Arm position

7. Place the eye close to the viewfinder.

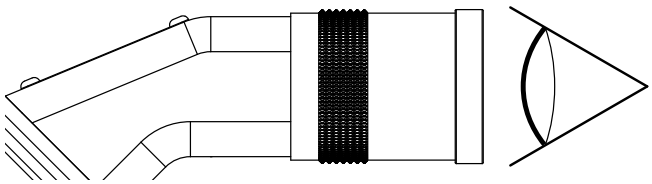

Figure 37. The Viewfinder

8. On the magnification zoom, set magnification to 12.
9. On the optical barrel, use the Objective Focus Adjuster to focus the image in distance.
10. On the optical barrel, use the Reticle Focus Adjuster to focus markings (see Figure 37).
11. Use a viewing position that ensures that the full circular view is in sight. An ellipse will appear when slightly off axis. The magnification zoom enables easier location of the transmitter or receiver and can be set to make the best eye position easily repeatable.

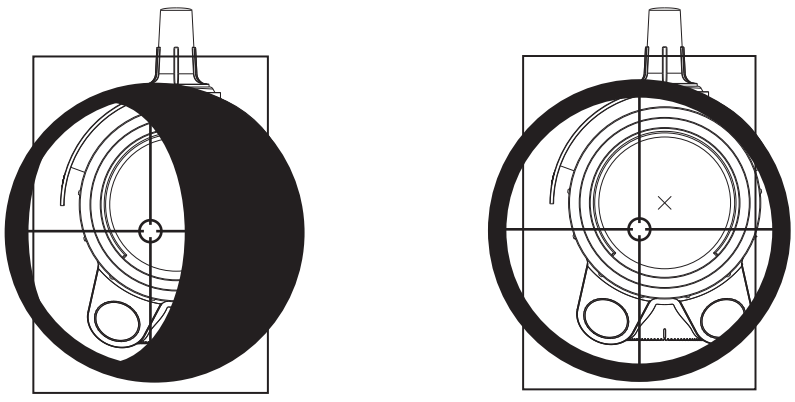

Off-axis view **Basic alignment**

Figure 38. Off-axis view versus basic alignment

12. Carry out fine adjustment of magnification zoom and image focus as necessary.
13. Tighten the **left-facing horizontal** M10 bolt on the universal mount bracket (torque of 30 Nm / 22.1 lb-ft).
14. Tighten the **right-facing horizontal** M10 bolt on the universal mount bracket (torque of 10 Nm / 7.4 lb-ft).
15. Contact-tighten the **spigot vertical** M10 bolt to hold the instrument firmly.
16. Contact-tighten the **spigot horizontal** M10 bolt to hold the instrument firmly.

Note
This is the last time the horizontal M10 bolts should need to be tightened. Further tightening later on will affect the fine adjustment and should be avoided.

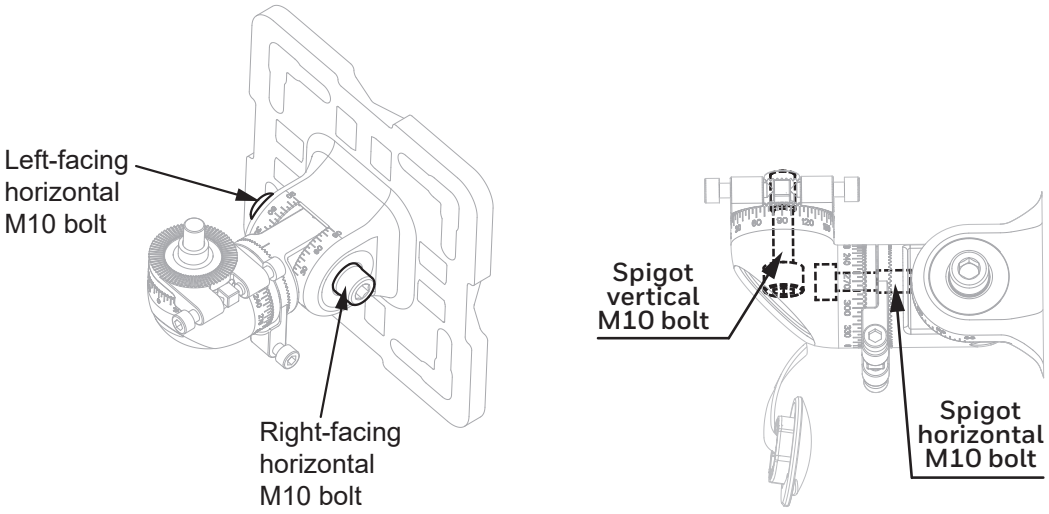

7.5 Accurate Alignment

The procedure for accurate fine-aligning the transmitter and receiver is the same.
At this point the Alignment Scope is attached to the instrument to be aligned.

⚠CAUTION

Do not adjust the telescope's elevation and windage adjusters as they have been factory set.

Note:
Use the Alignment Scope's magnification zoom for longer ranges.

⚠CAUTION

To ensure functionality of the fine adjustment screws, clean the threads with a fabric and apply grease prior to installation. Repeat with each re-alignment.

1. Adjust splines by 5 degrees on the **horizontal Fine Adjustment Ring** to set the approximate position. Tighten the **spigot horizontal M10 bolt** (torque of 30 Nm / 22.1 lb-ft).
2. Adjust splines by 5 degrees on the **vertical Fine Adjustment Ring** to set the approximate position. Tighten the **spigot vertical M10 bolt** (torque of 30 Nm / 22.1 lb-ft).
3. Adjust **horizontal M6 Fine Adjustment Screws**. Always work with both screws simultaneously – loosen one and tighten the other. Do NOT push one screw against the other.
4. Adjust **vertical M6 Fine Adjustment Screws**. Always work with both screws simultaneously – loosen one and tighten the other. Do NOT push one screw against the other.
5. Use the magnification zoom feature to move in and out to optimally aid alignment so that the **cross-hairs** viewed through the Alignment Scope are **centred on the window** of the other instrument (transmitter or receiver).
6. Tighten **horizontal** and **vertical M6 Fine Adjustment Screws** to a final torque of 4 Nm (3 lb-ft).
7. Check alignment and repeat steps 3 to 6 as necessary.

8. Remove the Alignment Scope assembly from the instrument by reversing the fitting instructions.
9. When the transmitter and receiver have each been aligned as described above, carry out the commissioning procedures described in the next section.

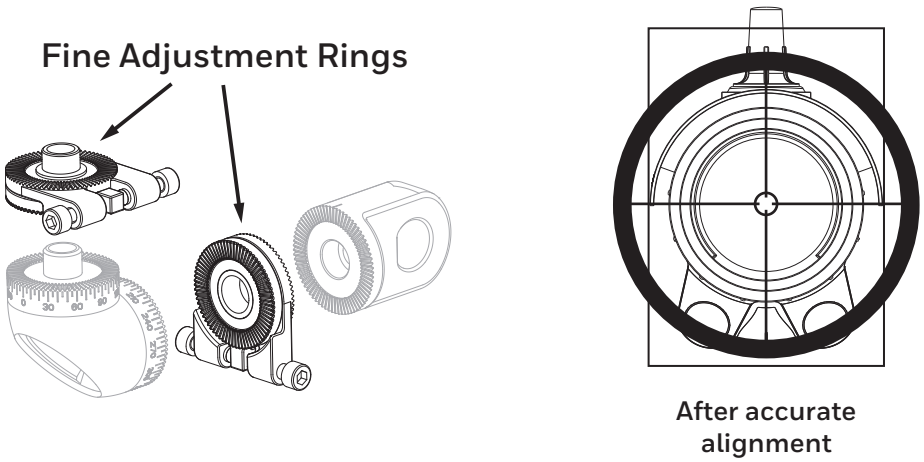

Figure 39. Fine Adjustment Rings and view after accurate alignment

7.6 Commissioning Searchline Excel Plus & Searchline Excel Edge

7.6.1 Connect to Honeywell Fixed Platform App via Mobile Device

Note
The prerequisites to commissioning using Bluetooth are:

- Honeywell Fixed Platform App is installed to a suitably-approved mobile device. Refer to Chapter 14 Specifications for required OS and version.
- User is fully registered to the Honeywell User Management Suite (UMS).

The communication range will vary depending on the field situation and installation location of Searchline Excel Plus & Searchline Excel Edge. Optimal range will be achieved when line-of-sight between the receiver and the mobile device is maintained.

Note
If there is no active Bluetooth communication for 10 minutes, the Searchline Excel Plus/Edge will terminate the Bluetooth connection automatically.

7.6.2 Power up Transmitter and Receiver

Apply power to the transmitter and receiver.

7.6.3 Set the Real-time Clock

Use Honeywell Fixed Platform App to set up real-time clock if not already set. Not setting real-time clock may result in wrong translation of the detector's timestamps.

7.6.4 Confirm Optical Alignment

Use Honeywell Fixed Platform App to confirm the optical alignment. The App greatly simplifies this step.

7.6.5 Tighten the Bolts

1. Check the final positioning of the instrument and make adjustments if necessary.
2. Tighten the **left-facing** horizontal M10 bolt to a final torque of 30 Nm (22 lb-ft).
3. Tighten the remaining bolts to a final torque of 30 Nm (22 lb-ft).
4. Push home the bolt cover plate.

7.6.6 Functional Test

Test the Searchline Excel Plus and Searchline Excel Edge response with a Functional Test Filter.

Refer to Chapter 9.3 *Functional Testing using Functional Test Filters* for the test procedure and acceptable responses to test filters for different gasses.

After the test is carried out, update the Installation Checklist with the nominal value of the test filter and the instrument's displayed response. Mark the Pass or Fail box.

7.6.7 4–20 mA Loop Integrity Test

Test the 4–20mA loop integrity:

1. Force the receiver to output a known current.
2. Monitor the known current at the control room or with a multimeter inserted into the loop.

After the test is carried out, update the Installation Checklist and mark the appropriate box.

7.6.8 Clear Historical Fault/Warning Log/Trend History Data/Alarm History Log

1. Connect the Mobile Device to the receiver via Bluetooth.
2. Start the Honeywell Fixed Platform App.
3. Clear the historical fault/warning log/trend history data/alarm history log in the App.

⚠CAUTION

Current ACTIVE fault(s) will stop the instrument operation. These have to be diagnosed and cleared in order to re-establish full operation..

7.6.9 Customer Notified

Make sure that the relevant customer/operator is notified of the installation problem(s). Mark box accordingly.

7.6.10 System Status

Upon leaving, note the Searchline Excel Plus or Searchline Excel Edge status, i.e., operational or non-operational.

7.6.11 Installation Checks/Tests

Carry out installation checks/tests and fill out the subsequent Installation Checklist. Carefully read the safety warnings, cautions and certification details in this manual. Ensure that they have been complied with, before and during the installation.

In order to help Honeywell Analytics to provide efficient assistance/service in the event of problems, return the Checklist to Honeywell Analytics or to their agent.

Declaring installation satisfactory

Only personnel fully trained by Honeywell Analytics or Honeywell Analytics authorised trainers can declare an installation satisfactory.

Mark the YES box and sign the form if:

1. having completed the installation and testing, the instrument is operating correctly, and
2. in the trained installer's opinion, the instrument should continue to operate reliably in this installation/operating environment providing that nothing significant about the installation/environment is changed.

If the instrument is not operating correctly or there are aspects of the installation/operating environment which in the trained installer's opinion could or will result in unreliable operation, mark the NO box.

Reasons for declaring an installation **unsatisfactory** could include:

- excessive movement/vibration of instrument's mounting,
- received signal levels too low,
- supply voltage too low,
- 4–20 mA loop integrity faults,
- unclearable active faults,
- any prevailing or probable condition which is known to unacceptably reduce reliability or functionality.

If Installation is unsatisfactory, state reasons

Briefly state the principal reasons why the installation is unsatisfactory, e.g.

- Instrument mounted on single scaffold pole,
- Excessive movement,
- Beam path obscured by pipes, insufficient received signal levels,
- Instrument overheated by intense sunlight.

Recommendations

Briefly describe the recommended actions which need to be performed in order to make the installation satisfactory, e.g.

- Mounting pole requires bracing/stiffening,
- Pipes obscuring beam to be moved, or transmitter/receiver relocated,
- Provide correct supply voltage.

1. Mount Rigidity

Check that the instruments have been mounted securely to the supporting structure. Check that the supporting structure is sufficiently rigid to maintain alignment in the anticipated operating conditions. A maximum angular movement of ±0.5° is allowable.

As an approximate guideline, a sufficiently rigid mount/supporting structure will only move a few millimetres (not more than ±6 mm) when leaning body weight against it. When pushed hard and released, the mount/supporting structure should return quickly to its original position and should not wobble or sway. If the mount/support is unacceptable, briefly describe the problem, e.g., Mount wobbles unacceptably, Mounting pole too thin.

2. Vibration

Check the installation and its close surrounds for potential or existing sources of excessive vibration. Such sources could include heavy plant/machinery, turbines, generators etc.

If there is the possibility that such vibration sources could or are causing unacceptable movement, enter a brief description, e.g. Turbine nearby, Below conveyor, Excess Heat/Frost.

Check the installation and its surrounds for potential sources of excessive heat. Consider measures to be taken if frost build-up is very likely. The instrument is specified to range between -60 °C/+65 °C (-76 °F/+140 °F). Excessive heat may include direct sunlight in hot climates, flare-stacks, generator/turbine exhausts and steam vents. Excessive frost build-up commonly occurs in very cold climates. Enter a brief description, e.g. Direct sun, Kuwait, Flare-stack 2 metres away; or Winter anti-cyclone, Siberia; or Winter storm, Iceland.

3. Supply Voltage

Check that the supply voltage applied to the instrument is within the specified 18 V to 32 V range and is stable.

Enter the supply voltage and stability, e.g. 22.5 V, stable, 19 V, ±2 V fluctuation.

4. Earthing

Inspect the earth connections to the instruments. If the instrument is connected to local metalwork or the safety/general use earth, enter Local Safety. If the instrument has been isolated from local metalwork/earth and is connected to a clean, instrument earth, enter Instrument earth (refer to Chapter 6.2.7 *Earthing recommendations*).

5. RFI/EMC

Assess the installation, cabling and its close surrounds for known/potential sources of excessive Radio Frequency Interference/Electromagnetic Interference (RFI/EMI. Such sources could include radio/radar transmission antennae, high voltage switch-gear, large electrical generators/motors etc.

Searchline Excel Plus & Searchline Excel Edge is extremely immune to RFI/EMI, complying with the most stringent requirements specified in EN50270. Precautions should be taken to avoid interference on the field cabling and connections, in turn to avoid affected reading received at the control room.

Enter brief details of known/potential RFI/EMI sources that are within five metres of the transmitter/receiver and/or its cabling. If cable is unscreened or inadequately protected, note concerns. Examples of the sort of information to enter are: 10 m cable, unscreened; Radar, 2 m from the receiver; Cable routed over 400 kW generator.

6. Contaminants

Assess the installation and its surrounds for sources of contaminants that could build up on the instrument's windows. Such contaminants could include oil mist, heavy sea spray, drilling mud, dirty exhaust fumes, wave splash, etc.

If there is a realistic possibility that such contaminants could cause a significant problem, enter a brief description, e.g., Drilling mud spray, Diesel generator exhaust.

7. Beam Obstruction/Blocks

Ideally, a clear path of at least 20 cm diameter should be provided between the transmitter and the receiver. Enter any obstructions which encroach into this path, e.g. Process pipes, Tree branches.

Assess the installation and the beam path for potential sources of beam blockage. These could include personnel walking in the beam, parking vehicles, moving machinery/plant, growing vegetation etc.

If there is a realistic possibility that they could cause a significant problem, enter a brief description, e.g., Personnel in corridor, Loading bay vehicles.

INSTALLATION CHECK LIST							xxxxPxxxx
CUSTOMER/OPERATOR							
SITE/FACILITY							
PRODUCT TYPE:		SEARCHLINE EXCEL PLUS		SEARCHLINE EXCEL EDGE			
OPERATING RANGE							
GAS TABLE:	METHANE	ETHANE	PROPANE	BUTANE	PENTANE	ETHYLENE	PROPYLENE
INSTRUMENT LOCATION:							
TAG NO. (RX):				TAG NO. (TX):			
SER NO. (RX):				SER NO. (TX):			
MOD STATE (RX):		MOD STATE (TX)		CERTIFICATION:			
CHECK/TEST		RECIEVER		CHECK/TEST		TRANSMITTER	
Mount Rigidity				Mount Rigidity			
Vibration:				Vibration:			
Excess Heat/Frost:				Excess Heat/Frost:			
Supply Voltage:				Supply Voltage:			
Earthing:				Earthing:			
RFI/EMC:				RFI/EMC:			
Contaminants:				Contaminants:			
BEAM OBSTRUCTIONS / BLOCKS:							
(cont.)							
TEST FILTER:		Response:		Pass:		Fail:	
4-20mA LOOP INTEGRITY		Pass:		Fail:		Untested:	
FAULT / WARNING LOG:		Clear:		Faults/Warnings:			
(cont.)							
INSTALLATION SATISFACTORY:			Yes:	No:	Signed:		
INSTALLED BY (PRINT)					DATE:		
IF INSTALLATION UNSATISFACTORY, REASONS							
RECOMMENDATIONS							
						CUSTOMER NOTIFIED:	
SYSTEM STATUS:		Operational:				Non-operational:	

8 Operation and Configuration

8.1 Operation

This chapter describes the operation of Searchline Excel Plus & Searchline Excel Edge in different states (Normal, Alarm, Fault, Periodic Test).

8.2 Status Signalling

Searchline Excel Plus & Searchline Excel Edge utilize several outputs to indicate the system status, namely the high visibility indicator, the mA Loop, relays and digital communication interfaces (Bluetooth, HART DTM and Modbus). The following sections describe the instrument behaviour.

8.2.1 LED Visual Status Indicator

NOTE:
The visual status indicator is not considered a safety output. Its behaviour is configurable and may indicate different states than other outputs.

Searchline Excel Plus & Searchline Excel Edge are equipped with a high visibility LED status indicator that visually indicates the status of the instrument. See the following table for behaviour configuration information:

Operation without Bluetooth connected	Colour	Config. Set	Time Sequence (2.4 sec)					
			1 (400ms)	2 (400ms)	3 (400ms)	4 (400ms)	5 (400ms)	6 (400ms)
Fault	Yellow flashing	Any[1]	Yellow		Off			
Inhibit	Yellow steady	Any[1]	Yellow					
Warning	Yellow flashing with green alternating	Any[1]	Yellow		Off	Green		Off
Beam Block Warning[6]	Yellow flashing with green alternating	Any[1]	Yellow		Off	Green		Off
Normal	Green steady	Default	Green					
	Green flashing	Optional 1	Green	Special[2]				
	Off	Optional 2	Special[3]					
Alarm	Red flashing	Any[1]	Red		Off			
Over-range	Red flashing	Any[1]	Red			Off		

Operation with Bluetooth connected	Colour	Config. Set	Time Sequence (2.4 sec)					
			1 (400ms)	2 (400ms)	3 (400ms)	4 (400ms)	5 (400ms)	6 (400ms)
Fault	Yellow flashing	Any[1]	Yellow		Off			
Inhibit	Yellow steady	Any[1]	Yellow					
Warning (connecting)	Blue flashing with yellow alternating	Any[1]	Blue	Off		Blue	Off	Yellow
Warning (connected)	Blue steady with yellow alternating	Any[1]	Blue					Yellow
Beam Block Warning[6]	Blue steady with yellow alternating	Any[1]	Blue					Yellow
Normal (connecting)	Blue flashing	Default	Blue	Off		Blue	Off	
	Blue flashing	Optional 1; Optional 2	Blue	Special[4]		Blue	Off	
Normal (connected)	Blue steady	Default	Blue					
	Blue flashing	Optional 1; Optional 2	Special[5]					
Alarm	Red flashing	Any[1]	Red		Off			
Over-range	Red flashing	Any[1]	Red			Off		

Notes:

[1)] Any[1] = any of the options Default, Optional 1, Optional 2 configurations, which correspond to the values of the LEDPatternSet parameter as described in Sec. 8.6.1 Parameters

[2)] Pattern is defined as repeating: Green for 166ms then OFF for 19s

[3)] Pattern is defined as continuous OFF

[4)] Pattern is defined as repeating pattern (400ms Blue, 800ms OFF, 400ms Blue, 800ms OFF) followed by 5s OFF period between repeats

[5)] Pattern is defined as repeating pattern (6*400ms Blue) followed by 5s OFF period between repeats

[6)] Beam Block Warning is disabled in factory configuration and can be set up upon request

The Default, Optional 1 and Optional 2 Configuration Set correspond to the *LEDPatternSet* parameter as described in Sec. 8.6.1 Parameters.

8.2.2 mA Loop Status

Searchline Excel Plus & Searchline Excel Edge are equipped with a 4–20 mA loop output which can operate in source or sink mode. Source and sink modes are configured by wiring. For more information see the wiring diagram in the *Electrical Installation* chapter. This output is a safety-related output and is compatible for use in SIL 2 applications. Normal operation and alarm conditions are indicated between 4 to 20 mA, depending on configuration.

The mA Loop offers two modes of operations:

1. Proportional to the detected gas concentration.
2. Discrete, where the output will switch between distinct levels, based on detector status.

Fault and Inhibit indications are signalled with values lower than 4 mA, Over-range indications are signalled with value higher than 20 mA. Output levels of the 4-20 mA loop are configurable,

See the following table for output levels:

Mode	Default Value (mA)		Min Value (mA)	Max Value (mA)
	Discrete Mode	Proportional Mode		
Fault	1		0	3.6
Inhibit	2		1	3.6
Warning	3		1	4
Beam Block Warning [1]	2.5		1	4
Normal	4	Proportional to gas concentration	4	20
Alarm	20	Not available	4	20
Over-range	21		20	22

Note:

[1)] Beam Block Warning is disabled in factory configuration and can be set up upon request

8.2.3 Relay Signalling

Searchline Excel Plus & Searchline Excel Edge are equipped with three independent relays, designated for Fault, Alarm1 and Alarm2. These relays are safety-related outputs and are compatible for use in SIL1 applications. The Fault relay is used for indication of various fault conditions; the Alarm1 and Alarm2 relays are used to indicate alarm conditions. All the relays are configurable, giving an option of Normally Energised / De-energised and latching / non-latching of events.

⚠CAUTION

Fault relay will be triggered when user performs Inhibit operation.

8.3 Normal Operation

During normal operation, the 4–20 mA output indicates the gas concentration.

The output is:

1. Linear within the range of gas concentration in Proportional mode
2. 4 mA in Discrete mode

Searchline Excel Plus & Searchline Excel Edge are able to zero very slow increases in path integral concentration, e.g., of free-moving hydrocarbons.

The compensation happens immediately after power-up. The value of compensated gas reading is limited to an absolute value.

8.4 Warning

A warning indicates that the unit is still in operation and capable of detecting gas but may require maintenance, realignment, cleaning or servicing.

8.4.1 Beam Block Warning

A beam block warning indicates that a beam blockage occurred between the transmitter and the receiver. This indication is a transitional notification for beam block conditions lasting longer than parameter value of Beam Block Warning Delay. Indication lasts for Beam Block Fault Delay time and is followed by Beam Block Fault if the condition persists. Beam Block Warning is disabled in factory configuration and can be set up upon request.

⚠CAUTION

Only the default parameter settings fulfil the Functional Safety EN 61508 certification criteria. Any changes or modifications to these parameters may cause the unit to fail to respond within the certified 30-second time-out period.

Default settings and ranges:

- Beam Block Warning Delay: default = 30 sec, minimum = 30 sec, maximum = 600 sec
- Beam Block Fault Delay: default = 0 sec, minimum = 0 sec, maximum = 600 sec

Note:
The default settings for these parameters ensure that the diagnostic test interval for the Searchline Excel Plus and Edge is less than 30 seconds in normal operation, as mentioned in the functional safety manual. Any changes or modifications to these parameters may cause the diagnostic test interval of the product to be slower than 30 seconds when it comes to the reaction to beam block events. The end user should determine if such an increase in the diagnostic test interval can be tolerated given their application.

Transition from Beam Block Warning to Beam Block Fault

Example:
Beam Block Warning Delay is set to 30 sec (default)
Beam Block Fault Delay is set to 0 sec (default)
mA Loop current is set to default configuration

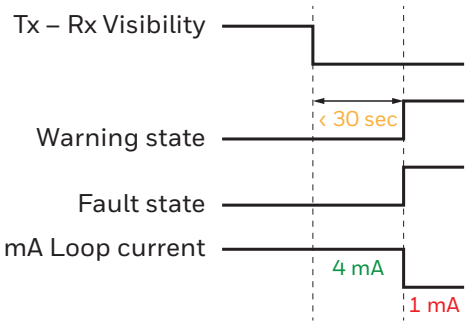

Example:
Beam Block Warning Delay is set to 40 sec
Beam Block Fault Delay is set to 10 sec
mA Loop current is set to default configuration

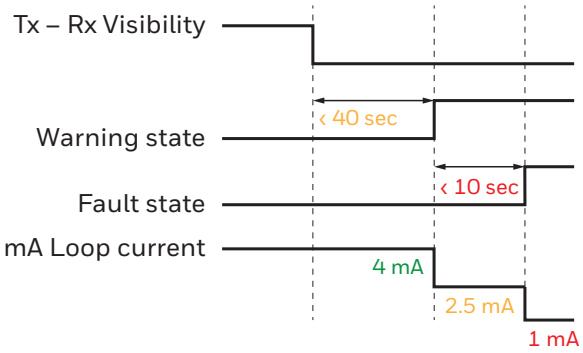

Recovery from Beam Block Fault

Example:

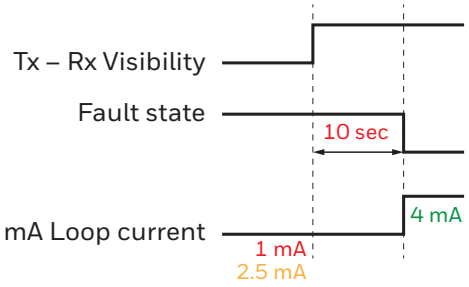

- If Beam block condition ceases, the unit returns to normal state within 30 seconds.

8.5 Operation During Fault

If Fault is indicated the visual indicator starts to flash in yellow, the fault relay is de-energized and 4-20 mA loop is set to 1 mA.

Analog outputs lower than 4 mA and higher than 20 mA represent diagnostic information. The fault relay in this mode is normally energized and the visual indicator is lit steady green.

NOTE:
HART communication requires >1 mA current output to support transmission. If the fault level is configured to be below 1 mA, HART communications will cease.

8.6 Operation During Alarm

Searchline Excel Plus & Searchline Excel Edge feature three levels of alarm: Low Alarm, Alarm and Over-range.

8.6.1 Low alarm

During Low Alarm, the Alarm1 relay is energized/de-energized depending on its configuration. The 4–20 mA loop is set to 16 mA in Discrete mode. It is proportional to gas concentration in Proportional mode. The visual indicator flashes red.

8.6.2 Alarm

During Alarm, the Alarm2 relay is energized/de-energized depending on its configuration. The 4–20 mA loop is set to 20 mA in Discrete mode. It is proportional to gas concentration in Proportional mode. The visual indicator flashes red.

8.6.3 Over-range

Searchline Excel Plus & Searchline Excel Edge indicate Over-range when a high gas concentration is detected.
During Over-range, the Fault relay is additionally energized/de-energized depending on its configuration.

The 4–20 mA loop is set to >20 mA in both Discrete mode and Proportional mode. The visual indicator flashes red.

Searchline Excel Plus & Searchline Excel Edge indicate Fault for thirty seconds after the Over-range condition is no longer detected.

Note
Searchline Excel Plus & Searchline Excel Edge log 10 minutes of recording for each of the last 5 verified alarms.
The 10 minutes are divided into 5 minutes before and 5 minutes after the alarm.

8.7 Configuration Change and Parameters

⚠CAUTION

The unit must be set to Inhibit mode to allow for configuration change. The configuration change will only be accepted from the interface (Bluetooth, HART) which has set the Inhibit mode.

⚠CAUTION

Configuration change and/or maintenance can be performed using only one type of interface at a time (Bluetooth or HART). Simultaneous use of multiple interfaces is not supported.

8.7.1 mA Loop parameters

⚠CAUTION

Configuration of the mA Loop parameters will be accepted if the following relationships between values are maintained:

mA Loop Fault <= mA Loop Inhibit <= mA Loop Warning <= mA Loop Normal <= mA Loop Alarm 1 <= mA Loop Alarm 2/Alarm 3 <= mA Loop Overrange

mA Loop Fault <= mA Loop Inhibit (if Fault is set lower than Inhibit, Warning must be set higher by at least 0.4 mA; else Fault must equal to Inhibit)

mA Loop Inhibit <= mA Loop Warning (if Inhibit is set lower than Warning, Warning must be set higher by at least 0.4 mA; else Inhibit must equal to Warning)

mA Loop Inhibit <= mA Loop Beam Block Warning (if Inhibit is set lower than Beam Block Warning, Beam Block Warning must be set higher by at least 0.4 mA; else Inhibit must equal to Beam Block Warning)

mA Loop Beam Block Warning <= mA Loop Normal (if Beam Block Warning is set lower than Normal, Beam Block Warning must be set higher by at least 0.4 mA; else Beam Block Warning must equal to Normal)

(if Beam Block Warning is different to Warning, Beam Block Warning must be separated from Warning by at least 0.4 mA; else Beam Block Warning must equal to Warning)

mA Loop Warning <= mA Loop Normal (if Warning is set lower than Normal, Warning must be set higher by at least 0.4 mA; else Warning must equal to Normal)

mA Loop Normal <= mA Loop Alarm 1 (if Normal is set lower than Alarm 1, Warning must be set higher by at least 0.4 mA; else Normal must equal to Alarm 1)

mA Loop Alarm 1 <= mA Loop Alarm 2 (if Alarm 1 is set lower than Alarm 2, Warning must be set higher by at least 0.4 mA; else Alarm 1 must equal to Alarm 2)

mA Loop Alarm 3 must equal to mA Loop Alarm 2

mA Loop Alarm 2 <= mA Loop Overrange (if Alarm 2 is lower than Overrange, Warning must be set higher by at least 0.4 mA; else Alarm 2 must equal to Overrange)

Parameter Name	Range
Ma Loop Mode	0 – discrete 1 – proportional
Ma Loop Inhibit	Inhibit current 1.0 mA to 3.6 mA, step 0.1 mA, default 2.0 mA
Ma Loop Warning	Warning current 1.0 mA to 4.0 mA, step 0.1 mA, default 3.0 mA
Ma Loop Warning Beam Block	Warning current 1.0 mA to 4.0 mA, step 0.1 mA, default 2.5 mA
Ma Loop Fault	Fault current 0.0 mA to 3.6 mA, step 0.1 mA, default 1.0 mA
Ma Loop Overrange	Over-range (alarm 4) current 20.0 mA to 22.0 mA, step 0.1 mA, default 21.0 mA
Ma Loop Alarm 1	Alarm 1 current in discrete mode 4.0 mA to 20.0 mA, step 0.1 mA, default 16.0 mA
Ma Loop Alarm 2	Alarm 2 current in discrete mode 4.0 mA to 20.0 mA, step 0.1 mA, default 20.0 mA
Ma Loop Force Timeout	Force timeout in seconds, 0 means no timeout
Ma Loop Normal	Normal current of mA loop in discrete mode 4.0 mA to 20.0 mA, step 0.1 mA, default 4.0 mA

8.7.2 Other parameters

Parameter Name	Description
Led Intensity	LED brightness 0 to 5 (0 = off; 1 = 1%; 2 to 4 = exponential scale between 1% and 100%; 5 = max)
Led Force Timeout	Force timeout in seconds, 0 means no timeout
LED Pattern Set	Selects configuration scenario (set) for LED Status Indicator behavior. Refer to Sec. 8.2.1 LED Visual Status Indicator for full details on instrument operation states and corresponding LED Status Indicator behavior. 0 – Default 1 – Optional 1 2 – Optional 2

Parameter Name	Description
Hart Poll Addr	HART specific short address, 0 to 63
Hart Current Mode	Loop current mode 0 – Multidrop mode 1 – Point to point mode (default)

Parameter Name	Description
Gas Reading Units	CAUTION: Maximum value in .ppm depends on gas type selection. Units associated with the device: 1 – LELm, range 0~5 (0~100%, default) 2 – PPMm, range 0~500,000 Access: R/W
Alarm Set Point 1	units – as per Gas Reading Units range – depends on unit and gas type selection. For the unit selected, the value must range 10%~60%FSD Access: R/W
Alarm Set Point 2	units – as per Gas Reading Units range – depends on unit and gas type selection. For the unit selected, the value must range 10%~60%FSD Access: R/W
Gas Reading	Final gas reading expressed as in Gas Reading Units. Range depends on unit and gas type selection. Access: R
Gas Type	Gas type configured in factory. 1 – UNIVERSAL HYDROCARBON (default) 2 – METHANE, 3 – ETHANE, 4 – PROPANE, 5 – BUTANE, 6 – PENTANE, 7 – ETHYLENE, 8 – PROPYLENE, Access: R
Path Length	Distance between transmitter and receiver in meters. units – meters range: Searchline Excel Plus: 2~120 m (6 ft to 393 ft) Searchline Excel Edge: 60~330 m (196 ft to 1082 ft) Access: R/W

Parameter Name	Description
Filter Level	level of filtration that affects response time level 0 = 3 pulses (response time 1s) level 1 = 7 pulses (response time 2s) level 2 = 11 pulses (response time 3s) [default] Access: R/W
Dynamic Reserve	Dynamic reserve of the reference signal Range 0.0~1.0 0 – no reserve 1 – full range Access: R
System Type	Identification of device type. 1 – Searchline Excel Plus) 2 – Searchline Excel Edge) Access: R
AutoZeroEnable	Enables floating baseline control (automatic runtime calibration) 0 – disabled 1 – enabled [default] Access: R/W
Alignment Status Tx	Status of transmitter optical alignment. 0 – OK 1 – misaligned Access: R
Alignment Status Rx	Status of receiver optical alignment. 0 – OK 1 – misaligned Access: R
Alignment Status	Disconnected – Transmitter alignment is being detected Connecting – Transmitter alignment is being detected Connected – Transmitter alignment is detected Access: R
Zero Calibration Result	Zero value means device is correctly calibrated. Non-zero value means potential issue with calibration (bit 8 has failed). Access: R

Parameter Name	Description
Beam Block Warning Delay	default = 30 sec, minimum = 30 sec, maximum = 600 sec, step by 1 sec
Beam Block Fault Delay	default = 0 sec, minimum = 0 sec, maximum = 600 sec, step by 1 sec

⚠CAUTION

Only the default parameter settings for the Beam Block Warning Delay and Beam Block Fault Delay fulfil the Functional Safety EN 61508 certification criteria. Any changes or modifications to these parameters may cause the unit to fail to respond within the certified 30-second time-out period.

⚠CAUTION

Only the default parameter settings for the Filter Level fulfil the accuracy and performance certification criteria.

Note

In default configuration, after beam block is detected, the 30-second Beam Block Warning Delay is initiated. After it runs out, the unit indicates Fault condition.

9 Maintenance

The Searchline Excel Plus & Searchline Excel Edge detectors should periodically be inspected, cleaned and tested. The required frequency of inspection will depend on the hazardous area risk and maintenance plan. Refer to IEC/EN 60079-29-2 or other local or national regulations for guidance on establishing an appropriate maintenance routine.

Depending on the local regulations and site conditions, cleaning and functional testing of the detector can be carried as described in the following sub-sections. The detector should remain powered during these procedures.

Advanced diagnostics, maintenance and reporting are done via IS Handheld Unit and Honeywell Fixed Platform App.

⚠CAUTION

Do not open either the transmitter or receiver unit. The warranty of units which have been opened is invalidated. Front enclosures may be opened only for advised repair maintenance by an authorized and qualified person.

⚠CAUTION

Seek authorized service in case of detector failure or malfunction.

Note
The infrared beam is invisible and eye safe.

9.1 Inspection and Cleaning

⚠CAUTION

Do not use solvents or abrasives on the Searchline Excel Plus or Searchline Excel Edge transmitter or receivers.

Do the following:

1. Inspect the detector and cabling for signs of physical damage.
2. Use the IS Handheld Unit and the Honeywell Fixed Platform App to inhibit the signal output. (Since the signal output may vary during cleaning, due to the optical path being disturbed, it is important to inhibit the analogue output.)
3. Clean any dust or dirt from the detector unit using soapy water and a damp soft cloth.
4. Use the App to release the signal output.
5. Use the App to re-zero the unit.

9.2 Deluge and Flooding

⚠CAUTION

Refer to guidance in IEC 60079-29-2 for determining an appropriate calibration interval in the event of flooding or deluge of Searchline Excel Plus & Edge.

If exposed to deluge or flooding, the unit may lose its infrared signal and will enter the FAULT state. After the flooding subsides, there is the possibility that contaminants will be left on the windows.

Ensure to do the following:

1. Clean the detector body.
2. Clean the detector window.
3. Power cycle the detector.
4. Run diagnostics with the Fixed Platform App.
5. Check alignment between transmitter and receiver.
6. Re-zero the unit.

If the detector cannot be reset to Normal operational mode (LED status indicator is green), contact authorized service.

9.3 Functional Testing using Functional Test Filters

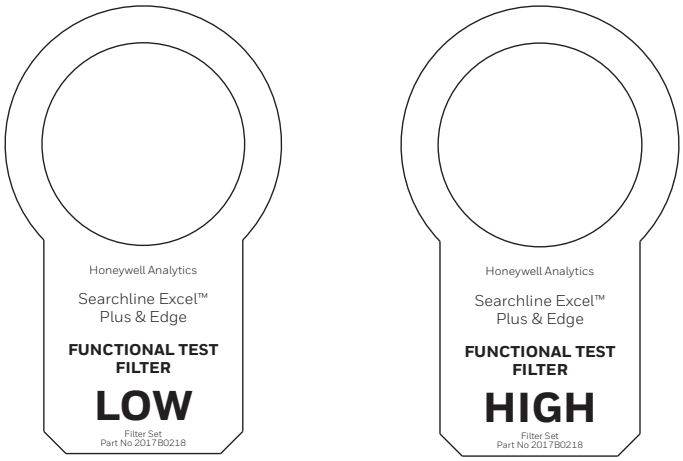

Figure 40. Low and High Functional Test Filter

In order to use the Functional Test Filters, access to the front of the receiver is required.

Note
Refer to the test sheet that was supplied with the receiver for the original filter and response measured by the factory. Wherever possible this should be used as a reference for all subsequent tests.

Note
An extender pole may be utilized for testing Searchline Excel at height.

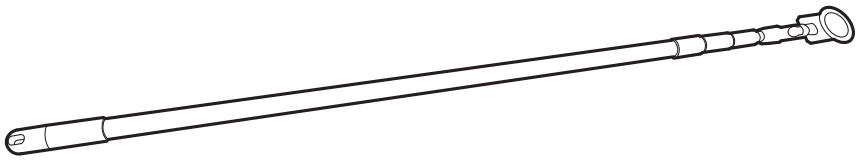

Figure 41. Extender Pole for Functional Test Filters

9.3.1 Basic Functional Test

1. Ensure the area is gas free.
2. Ensure the receiver window is clean.
3. Slide the **LOW TEST FILTER** into the cowling at the front of receiver.
4. Receiver LED status indicator should flash red.
5. Remove the LOW TEST FILTER from the cowling.
6. Receiver LED status indicator should return to green (default state).
7. Slide the **HIGH TEST FILTER** into the cowling at the front of the receiver.
8. Receiver LED status indicator should flash red.
9. Remove the HIGH TEST FILTER from the cowling.
10. Receiver LED status indicator should return to green (default state).

9.3.2 Advanced Functional Test

1. Ensure the area is gas free.
2. Ensure the receiver window is clean.
3. Switch on the IS Handheld Unit and start the Honeywell Fixed Platform App.
4. Connect the App to the receiver to be tested.
5. Go to **Maintenance** menu, tap on **Bump Test**.
6. You will be prompted to confirm that receiver is to be switched to Inhibit mode. Tap on OK.
7. You will be prompted to confirm that receiver windows are clean. Tap on WINDOWS ARE CLEAN, PROCEED.
8. You will be informed that zeroing was automatically performed. Tap on OK, PROCEED.
9. Depending on the profile you are logged in either REGULAR or EXPERT testing will be performed.

REGULAR USER

1. Slide the LOW TEST FILTER into the cowling at the front of the receiver.
2. Tap on AREA IS GAS FREE, PROCEED. Low test reading is performed.
3. If low test reading IS within the typical response, the test has passed. You will be prompted to remove the Low Test Filter from the receiver. Tap on PROCEED TO HIGH TEST.
4. If low test reading IS NOT within the typical response, the test has failed. Subsequently you can:
   - TEST AGAIN
   - Proceed anyway (with High Test)
   - CLEAN AND ZERO
5. When finished with testing remove the Low Test Filter from the cowling.
6. Slide the HIGH TEST FILTER into the cowling at the front of the receiver
7. Follow instructions and repeat the same procedure for HIGH TEST reading.
8. When finished with testing remove the High Test Filter from the cowling. Tap on CREATE REPORT.
9. A test report will be logged, retrievable from Reports/Bump Tests menu.

EXPERT USER

1. Slide the LOW TEST FILTER into the cowling at the front of the receiver.
2. Tap on AREA IS GAS FREE, PROCEED. Low test reading is performed.
3. Current reading data (in LEL.m) will be shown as well Initial Reading (LEL.m) and Typical Response (LEL.m)
4. Tap on PROCEED.
5. If low test reading IS within the typical response, the test has passed. You will be prompted to remove the Low Test Filter from the receiver. Tap on PROCEED TO HIGH TEST.
6. If low test reading IS NOT within the typical response, the test has failed. Subsequently you can:
   - TEST AGAIN
   - Proceed anyway (with High Test)
   - CLEAN AND ZERO
7. When finished with testing remove the Low Test Filter from the cowling.
8. Slide the HIGH TEST FILTER into the cowling at the front of the receiver
9. Follow instructions and repeat the same procedure for HIGH TEST reading.
10. When finished with testing remove the High Test Filter from the cowling. Tap on CREATE REPORT.
11. A test report will be logged, retrievable from Reports/Bump Tests menu.

The table below shows the typical responses that can be expected for LOW and HIGH test filters:

Test Filter	Typical Response
Low	1.3 LEL.m +/- 0.6 LEL.m
High	3.0 LEL.m +/- 0.6 LEL.m

Note
The actual value depends on the factory gas calibration. Refer to Honeywell Fixed Platform App or to HART DD files for the exact range of the unit.

9.4 Calibration Check using the Gassing Cell

⚠CAUTION

Prerequisite for calibration check using the gassing test cell is installation of the Honeywell Fixed Platform App to the handheld device.

⚠CAUTION

In some cases the use of the gassing test cell may distort Receiver alignment and trigger a misalignment warning indication during or shortly after the test. This warning indication is irrelevant to the test itself and can be ignored. The warning shall cease in 2 minutes after the gassing test cell is removed from the receiver unit.

The gassing test cell allows calibration to be checked using a user-specified gas concentration, as an alternative to the standard functional test filters.

The integrated LEL.m reading of the gas concentration in the test cell can be calculated using the following formula:

$$\mathbf{Int(LEL.m)}_{xl} = \mathbf{L}_{cell} * (\mathbf{Conc}_{gas} / \mathbf{LEL}_{gas})$$

where:

$\mathbf{Int(LEL.m)}_{xl}$ = Integrated LEL.m reading output by Searchline Excel Plus & Searchline Excel Edge in LEL.m

$\mathbf{L}_{cell}$ = Length of test cell in metres

$\mathbf{Conc}_{gas}$ = Gas concentration in %v/v

$\mathbf{LEL}_{gas}$ = Lower Explosive Limit of the gas in %v/v

The test gas must be the same as the test gas used during the initial calibration of the Searchline Excel Plus & Searchline Excel Edge units and ideally the concentration should be between 2 and 5 LEL.m, never below 1 LEL.m.

Note

Cross-calibration is not recommended. Typical values for cross-sensitivity are not sufficiently precise to enable valid calibration checks using the gassing test cell.
Response tests can easily be performed with the functional test filters as described in Chapter 9.3.

⚠WARNING

Take necessary precaution to ensure safety when dealing with high concentration gasses.

The gassing test cell supplied by Honeywell Analytics (Part No: 2017B0185) is 170 mm (6.7 in) long with gas path 138.8 mm (5.46 in) long and the following table outlines the response expected when using this gassing test cell:

Gas type	LEL of the gas	Concentration applied	Calculated response with 138.8 mm gas test cell	4-20mA output
Methane	4.4 % v/v	65 %v/v	2.5 LEL.m	12.0 mA
Ethane	2.4 % v/v	35 %v/v	2.5 LEL.m	12.0 mA
Propane	1.7 % v/v	25 %v/v	2.5 LEL.m	12.0 mA
Butane	1.4 % v/v	20 %v/v	2.5 LEL.m	12.0 mA
Pentane	1.1 % v/v	16 %v/v	2.5 LEL.m	12.0 mA
Ethylene	2.3 % v/v	34 % v/v	2.5 LEL.m	12.0 mA
Propylene	2.0 % v/v	30 % v/v	2.5 LEL.m	12.0 mA

⚠WARNING

These gases are flammable and/or toxic. Take appropriate precautions when handling.

To fit the gassing test cell follow the steps below:

1. Connect the gassing test cell to the receiver. Ensure the locking tab clicks into the right position. Rotate the handle clockwise to lock the gassing test cell onto the receiver.

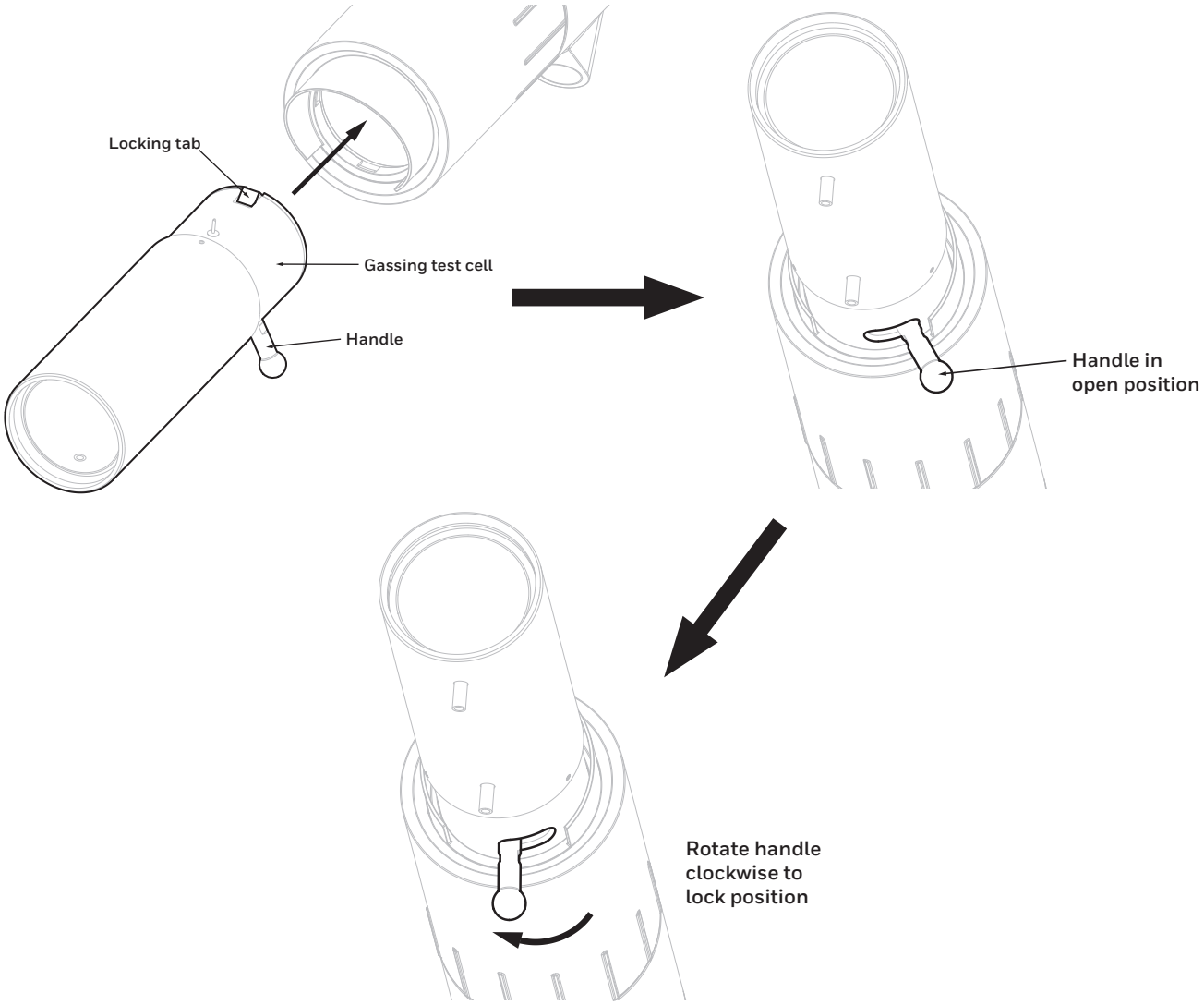

Figure 42. Connecting the gassing test cell to the receiver

2. Zero the receiver with the empty gassing test cell.
3. Apply the test gas to the gassing test cell. Avoid pressurising the test cell. Wait for the receiver output to stabilise.
4. Check if the receiver output is as indicated in the table above, ±5% FSD.
5. Remove the test gas from the gassing test cell.
6. Remove the gassing test cell.
7. Re-zero the receiver.

Note
Pentane cannot be used with the gassing test cell. At normal temperatures, this substance does not vaporise sufficiently to give a useful signal in the short path of the gassing test cell.

Note
Field calibration is not supported. If result is not as expected contact an authorized service centre.

9.5 Alignment Scope

Note
Consider a suitable cleaning method with regard to the climate. Avoid using moisteners in very cold temperatures.
Using a soft tissue or lens cloth, lightly wipe the scope lens dry with a minimum number of strokes.

9.6 Module Replacement

⚠CAUTION

Front enclosures may be opened only for advised repair maintenance by an authorized and qualified person.

Note:
This enables quick and easy repair via replacement of the electro-optical modules.

9.6.1 Receiver Modules

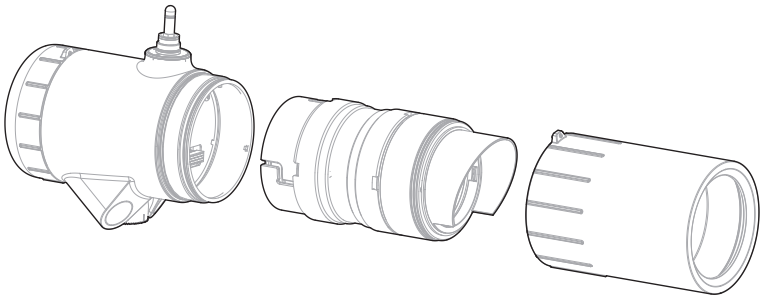

Figure 43. Receiver modules general view

In order to replace a receiver module carry out the following:

1. Unscrew the antenna cover from the top of the receiver and remove the sunshade.
2. Loosen the grub screw on the front cover.
3. Unscrew the front cover.
4. Follow the bayonet grooves and pull the module slightly out, then turn it counter-clockwise, and pull it out completely.

To re-assemble the receiver, perform the above procedure in reverse order.

9.6.2 Transmitter Modules

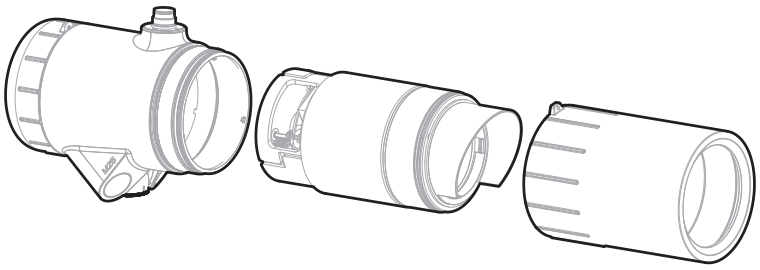

Figure 44. Transmitter modules general view

In order to replace a transmitter module carry out the following:

1. Unscrew the antenna cover from the top of the transmitter and remove the sunshade.
2. Loosen the grub screw on the front cover.
3. Unscrew the front cover.
4. Follow the bayonet grooves and pull the module slightly out, then turn it clockwise, and pull it out completely.

To re-assemble the transmitter, perform the above procedure in reverse order.

9.7 Operational Maintenance

⚠WARNING

The following procedure will indicate a gas reading. Ensure that any executive action has been inhibited prior to starting and completing the procedure.

Follow the procedure described in Section 9.4 and test the unit's response to high %V/V gas in a gassing cell. Verify that the response is within the tolerance for repeatability and temperature drift (see Chapter 14 Specifications).

10 Communications

10.1 HART®

General

Searchline Excel Plus & Searchline Excel Edge can communicate using the HART protocol, which provides digital communications superimposed on the standard analogue output. More information about the HART protocol can be found at the HART Communication Foundation's website https://fieldcommgroup.org.

HART is a controller-responder protocol, i.e., Searchline Excel Plus & Searchline Excel Edge do not continually transmit data but will respond on request.

Honeywell Analytics provides a HART Electronic Device Description (EDD) file for Searchline Excel Plus & Searchline Excel Edge, which is available to download from https://sps.honeywell.com/us/en/software/safety/gas-detection-software-and-firmware.

The EDD file is written using HART version 7.7, and is built with HART EDD Tokenizer versions 8 and 10.

The EDD file is supplied in .fm8, .fma and .fdix formats. It is compatible with a wide range of industry standard products.

To use HART communications, load the EDD file into a suitable HART host (see manufacturer's instructions).

Searchline Excel Plus & Searchline Excel Edge can be configured and operated by a Device Type Manager (DTM) that provides an easy-to-use user interface for accessing device variables, configuration parameters and diagnosis information.

The Device Type Manager (DTM) offers the combination of FDT and EDDL technologies and a uniform user interface according to the FDT style guide. It is a full-featured DTM device that carries the standard EDD-Interpreter components to execute the EDD during runtime. Because it is using existing device descriptions, plant operators will experience a familiar operating concept in the DTM.

Refer to the Searchline Excel Plus & Searchline Excel Edge *Device Type Manager User Manual* for more information.

The secondary controller can be a handheld terminal. The detector has been tested with industry standard handheld communicators.

Connection

It is best to use a dedicated HART interface point to connect a HART controller (primary or secondary).

If such an interface is not available, it is possible to connect to HART signal across a load resistor in the current loop, point-to-point mode. For example, provided there is the minimum resistance of 250 Ω in the 4–20 mA loop, the HART handheld device can be connected across the terminals in the junction box.

⚠WARNING

If using multi-drop mode, the mA output cannot be used to provide a functional safety rated output signal.

⚠CAUTION

Searchline Excel Plus & Searchline Excel Edge have a real time clock, which is factory set to UTC time. Using a handheld field communicator, do NOT set HART to non-UTC time. Changing detector's UTC setting may cause connection issues.

NOTE

The Fixed Platform App uses GMT time. The App auto-translates detector's UTC timestamps to local timestamps.

10.1.1 Searchline Excel Plus & Searchline Excel Edge HART Interface

⚠CAUTION

User is responsible for physical security of HART 4–20 mA loop cable by preventing unauthorized access to the communication line.

10.1.1.1 Access Levels and Password Protection

Searchline Excel Plus & Searchline Excel Edge user interface recognizes two login profiles. The default profile 'Guest' offers limited access rights. The second profile 'Engineer' is available to wider engineering personnel.

The default '**Guest**' profile is read-only and displays information about the current gas leak reading and detector status, including active warnings and faults.

The '**Engineer**' profile access is required to test the detector, and to make changes to the default configuration.

⚠CAUTION

The 'Engineer' profile access is password protected (8 digit alphanumeric, case sensitive). To avoid potential compatibility issues between different HART host devices, ensure that a full 8 digit password is used.

⚠CAUTION

The initial password for the 'Engineer' profile access is provided on a card, enclosed in the product package.
Other way to obtain the initial password is to contact Honeywell Analytics support.
For product and data security, it is important that the initial password is changed to a custom password upon first login.
Instructions to change the password are given in sec. 10.3.2.2.

10.1.1.2 Conditions for configuring HART

A device can be configured under the following conditions:

1. User must be logged in as **Engineer**,
2. User must switch the detector into Inhibit Mode (HART Write Protect Mode will be disabled).

If these two conditions are not met, configuration changes will NOT be accepted.

⚠CAUTION

Searchline Excel Plus & Searchline Excel Edge must be switched into Inhibit Mode in order to disable HART Write Protect Mode.
Changes to configuration are only accepted with the HART Write Protect Mode disabled.

10.1.1.3 HART Login Level Timeout

If the HART controller (Primary or Secondary Master) does not initiate communication (e.g., is disconnected), the user will be logged out after a timeout period. Re-login will be required to get Read-Write access for configuration of parameters or maintenance features.

If HART Login Level Timeout is set as 0 (zero), the timeout is deactivated. Login Level Timeout parameter is common for both Primary and Secondary Master.

The HART Login Level Timeout is calculated separately for Primary and Secondary Master.

10.2 HART Menu Structure

⚠CAUTION

Only the default parameter settings for the Filter Level fulfil the accuracy and performance certification criteria. Modified values may reduce response time and cause higher reading variation depending on installation and environment conditions.

The **Home Screen** displays current information about Searchline Excel Plus & Searchline Excel Edge.

- Home Screen
  - 1 Login
    - 1 Login Level
      - 1 Guest
      - 2 Engineer
    - 2 Change login profile
    - 3 Refresh all configuration variables
  - 2 Device Overview
  - 3 Device Maintenance
  - 4 Device Settings

Depending on the access level of the user, further menu options are available.

- Device Overview
  - **1 Live Data**
    - 1 Detector Status
    - 2 Measured Gas Concentration
    - 3 PV Loop Current
    - 4 mA Loop Mode
    - 5 Dynamic Reserve
    - 6 Bump Test Due
    - 7 UTC Time (24-hour, hh:mm)
    - 8 UTC Date (dd/mm/yyyy)
    - 9 Fault Relay (R1)
    - 10 Alarm Relay 1 (R2)
    - 11 Alarm Relay 2 (R3)
    - 12 Signal Strength
      - 1 Signal Intensity*
      - 2 RX Misalignment Factor**
      - 3 TX Misalignment Factor***
    - 13 Alignment Status
      - 1 Alignment Status TX
      - 2 Alignment Status RX
      - 3 Alignment Status
  - 2 Assembly Details
  - 3 Factory System Configuration

⚠CAUTION

Do NOT use the signal strength indication or misalignment indication to align Receiver or Transmitter unit.
For proper alignment procedure refer to Chapter 7: Alignment and Commissioning.

*Nominal value = 1. For proper bump test, value should be greater than 0.6

**For properly aligned unit, value should be greater than 0.3

***For properly alidned unit, value should be greater than 0.65

⚠CAUTION

When the unit is exposed to normal environmental conditions, properly aligned and configured, Signal Intensity is close to 1, Receiver misalignment factor is greater than 0.3 and Transmitter Misalignment factor is greater than 0.65. Wait at least 2 minutes for the reading to stabilize.

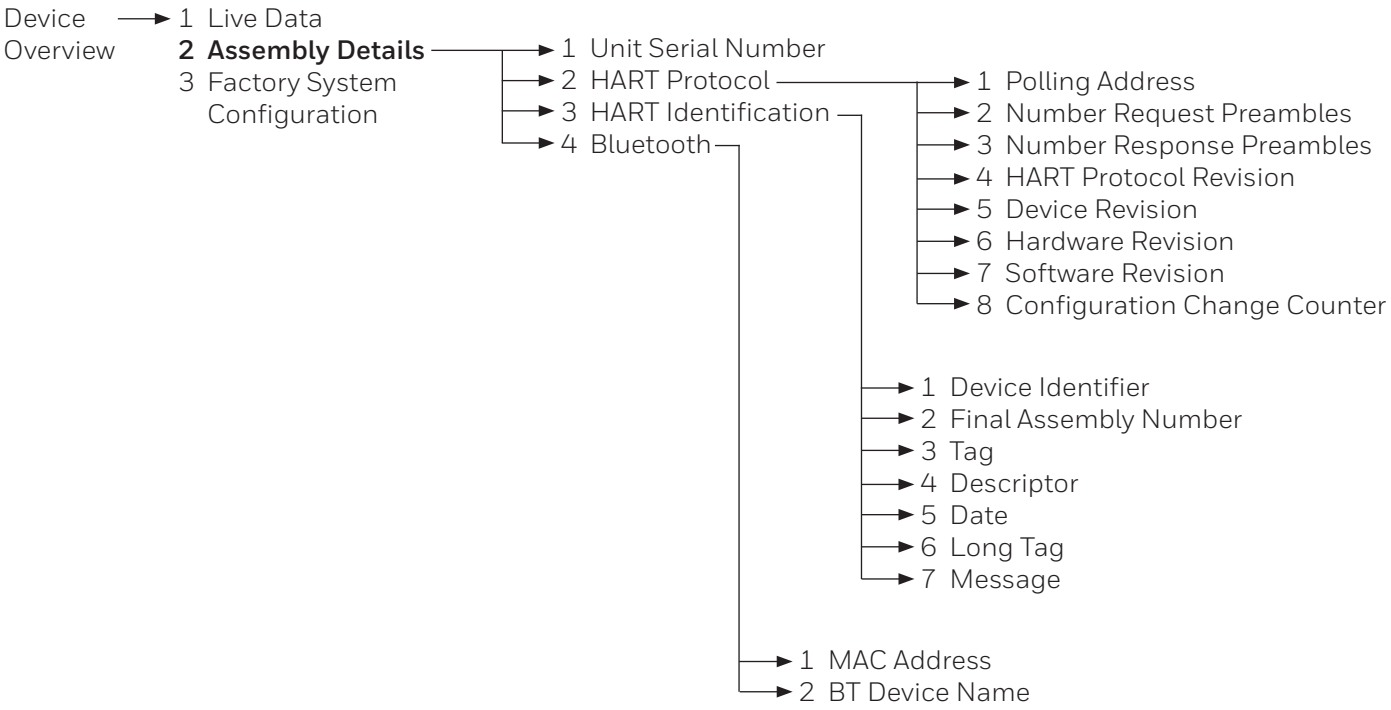
Device Overview
1 Live Data
2 Assembly Details
3 Factory System Configuration
1 Unit Serial Number
2 HART Protocol
3 HART Identification
4 Bluetooth
1 Polling Address
2 Number Request Preambles
3 Number Response Preambles
4 HART Protocol Revision
5 Device Revision
6 Hardware Revision
7 Software Revision
8 Configuration Change Counter
1 Device Identifier
2 Final Assembly Number
3 Tag
4 Descriptor
5 Date
6 Long Tag
7 Message
1 MAC Address
2 BT Device Name

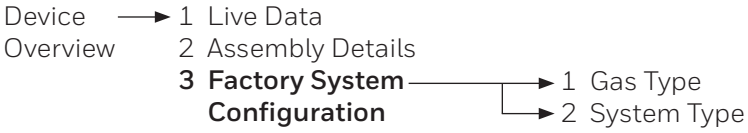
Device Overview
1 Live Data
2 Assembly Details
3 Factory System Configuration
1 Gas Type
2 System Type

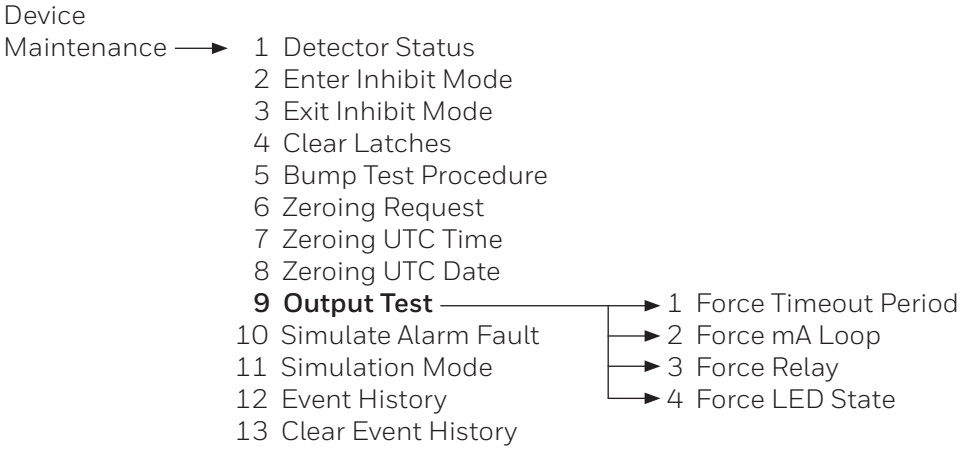
Device Maintenance
1 Detector Status
2 Enter Inhibit Mode
3 Exit Inhibit Mode
4 Clear Latches
5 Bump Test Procedure
6 Zeroing Request
7 Zeroing UTC Time
8 Zeroing UTC Date
9 Output Test
10 Simulate Alarm Fault
11 Simulation Mode
12 Event History
13 Clear Event History
1 Force Timeout Period
2 Force mA Loop
3 Force Relay
4 Force LED State

Device Settings →
1 Detector Status
2 Enter Inhibit Mode
3 Exit Inhibit Mode
4 Inhibit Mode → 1 Inhibit Mode Timeout
5 Alarms
6 System Setup
7 mA Loop
8 LED Ring
9 Relays
10 Force Config
11 Bluetooth
12 Bump Test Period
13 HART

Device Settings →
1 Detector Status
2 Enter Inhibit Mode
3 Exit Inhibit Mode
4 Inhibit Mode
5 Alarms → 1 Alarm 1, Setpoint
→ 2 Alarm 2, Setpoint
→ 3 Alarm 1, mA Loop Current
→ 4 Alarm 2, mA Loop Current
→ 5 Alarm Latch
6 System Setup
7 mA Loop
8 LED Ring
9 Relays
10 Force Config
11 Bluetooth
12 Bump Test Period
13 HART

Device Settings →
1 Detector Status
2 Enter Inhibit Mode
3 Exit Inhibit Mode
4 Inhibit Mode
5 Alarms
6 System Setup → 1 Path Length
→ 2 Filter Level
→ 3 Auto Zeroing
→ 4 Gas Reading Unit
→ 5 Beam Block - Warning Delay
→ 6 Beam Block - Fault Delay
→ 7 UTC Time (24-hour, hh:mm)
→ 8 UTC Date (dd/mm/yyyy)
7 mA Loop
8 LED Ring
9 Relays
10 Force Config
11 Bluetooth
12 Bump Test Period
13 HART

⚠CAUTION

Only the default parameter settings fulfil the Functional Safety EN 61508 certification criteria. Any changes or modifications to these parameters may cause the unit to fail to respond within the certified 30-second timeout period.

Device Settings →
1 Detector Status
2 Enter Inhibit Mode
3 Exit Inhibit Mode
4 Inhibit Mode
5 Alarms
6 System Setup
7 mA Loop → 1 mA Loop Mode
→ 2 Fault Level
→ 3 Inhibit Level
→ 4 Warning Beam Block Level
→ 5 Warning Level
→ 6 Over-range Level
8 LED Ring
9 Relays
10 Force Config
11 Bluetooth
12 Bump Test Period
13 HART

Device Settings →
1 Detector Status
2 Enter Inhibit Mode
3 Exit Inhibit Mode
4 Inhibit Mode
5 Alarms
6 System Setup
7 mA Loop
8 LED Ring → 1 LED Intensity, 2 LED Mode
9 Relays
10 Force Config
11 Bluetooth
12 Bump Test Period
13 HART

Device Settings →
1 Detector Status
2 Enter Inhibit Mode
3 Exit Inhibit Mode
4 Inhibit Mode
5 Alarms
6 System Setup
7 mA Loop
8 LED Ring
9 Relays → 1 Fault (R1) Default State, 2 Fault (R1) Latch, 3 Alarm 1 (R2) Default State, 4 Alarm 1 (R2) Latch, 5 Alarm 2 (R3) Default State, 6 Alarm 2 (R3) Latch
10 Force Config
11 Bluetooth
12 Bump Test Period
13 HART

Device Settings →
1 Detector Status
2 Enter Inhibit Mode
3 Exit Inhibit Mode
4 Inhibit Mode
5 Alarms
6 System Setup
7 mA Loop
8 LED Ring
9 Relays
10 Force Config → 1 Force Timeout Period
11 Bluetooth
12 Bump Test Period
13 HART

Device Settings →
1 Detector Status
2 Enter Inhibit Mode
3 Exit Inhibit Mode
4 Inhibit Mode
5 Alarms
6 System Setup
7 mA Loop
8 LED Ring
9 Relays
10 Force Config
11 Bluetooth → 1 Bluetooth → 1 On, 2 Off; 2 BT Device Name; 3 Advertisement Interval; 4 Change PIN
12 Bump Test Period
13 HART

Device Settings →
1 Detector Status
2 Enter Inhibit Mode
3 Exit Inhibit Mode
4 Inhibit Mode
5 Alarms
6 System Setup
7 mA Loop
8 LED Ring
9 Relays
10 Force Config
11 Bluetooth
12 Bump Test Period → 1 Bump Test Interval
13 HART

Device Settings →
1 Detector Status
2 Enter Inhibit Mode
3 Exit Inhibit Mode
4 Inhibit Mode
5 Alarms
6 System Setup
7 mA Loop
8 LED Ring
9 Relays
10 Force Config
11 Bluetooth
12 Bump Test Period
13 HART →
1 Polling Address
2 Final Assembly Number
3 Tag
4 Descriptor
5 Date
6 Long Tag
7 Message
8 Loop Current Mode
9 Login Level Timeout
10 Change Password

Menu Navigation

Menu options can be selected by highlighting the option and pressing Enter, by pressing the number of the option, or by double clicking on the option. For more information on how to select menu options please see the instructions for the HART host device being used.

Error Reporting

Searchline Excel Plus & Searchline Excel Edge implement HART protocol Command 48, meaning that if any event is detected in the detector while a HART host is connected, it will be reported immediately. Therefore warning messages may pop up during other operations.

10.2.1 Selecting the Gas Reading Units

Select menu **Device Settings** → **5 System Setup** → **8 Configure System** → **4 Gas Reading Units**

Select from the available options:

0 – (1-ratio) * 100%
1 – LELm
2 – PPMm

10.3 Commissioning using HART DTM Communications

Note:
The instructions that follow assume that a suitable HART host is connected to the Searchline Excel Plus & Searchline Excel Edge and that the user is logged in with 'Engineer' profile access privileges.

Introduction
This section explains several operations that may be required during commissioning. The user should work through First Time Switch On, User Configuration and Configure Device Identification Information, before selecting further operations as required by the specific installation.

First Time Switch On	Verifications required on first power up.
User Configuration	How to change settings from the default values: **Change the Password** – how to change the password for 'Engineer' profile access. **Set the Time and Date** - how to adjust the real time clock to local time. **Configure Warning, Inhibit and Over-range Signal Levels** - how to change the signal levels from the default settings.
Configure Detection Algorithm Mode	How to set algorithm mode for gas leak detection
Test 4–20 mA Loop Integrity	How to force the mA output to set levels to test the system. How to check that there is sufficient compliance in the loop to signal alarm and over-range.
Configure Alarm Set Point	How to change the internal threshold used to log gas leak events.
Output Test	How to test the system by simulating Alarm, Warning and Fault conditions for Relay and mA loop.
Clear Latch	How to clear alarm latch generated during commissioning.

⚠CAUTION

After changing any parameter, poll the Searchline Excel Plus & Searchline Excel Edge and verify that the received value is correct.

10.3.1 First Time Switch On

Note:
Searchline Excel Plus & Searchline Excel Edge are supplied ready for use. They do not require calibration during commissioning but require zeroing before first use. Zeroing may be required during functional testing.

Note:
During commissioning the 4–20 mA output can be monitored either at the control room or locally with a multimeter. When connecting or disconnecting a multimeter, power off Searchline Excel Plus & Searchline Excel Edge, otherwise the detector will indicate a latched warning that the 4–20 mA loop was broken. If this occurs it can be cleared using HART communications.

1. Before applying power to the detector, ensure that the field wiring is correct and all electrical connections are correctly set up. Refer to the *Electrical Installation* chapter of this manual for more information.

2. Apply power. Check that the supply voltage to Searchline Excel Plus & Searchline Excel Edge is between 18 and 32 Vdc. Monitor the 4–20 mA output during the start-up sequence, which should be as follows:

CURRENT OUTPUT	DURATION
< 1 mA	< 30 s
4 ± 0.05 mA	ongoing

Note:
If the output reverts to 3 mA or < 1 mA, a Warning or Fault is present. Follow the instructions below to investigate and clear a Warning or Fault (see Clear Faults or Warnings).
If local regulations or site practices require that a gas leak test is done to check that the detector is functioning, refer to Chapter 9 *Maintenance* for more instructions.

10.3.2 User Configuration

10.3.2.1 Parameter Checker

The Parameter Checker verifies conditions across all variables each time a change in configuration is requested.

If one of the checks fails an error is reported containing:

- Error code
- Parameter ID 1 (if appropriate)
- Parameter ID 2 (if appropriate)

10.3.2.2 Change the Password

⚠CAUTION

For product and data security, it is important that the password for 'Engineer' profile access is changed from the default setting.
The password is 8 digit alphanumeric (case sensitive). A full 8 digit password should be used.

1. Select **Device Setup**.
2. Select **Account**.
3. Select **Change Password**.
4. Enter the password xxxxxxxx (eight characters, Alphanumeric, case sensitive) and press **Enter**.
5. The display shows a confirmation message, press **OK**.
6. Press **Back** to return to the Device Setup menu.

Note:
Some HART handheld devices contain a default password or hold a previously used password. Ensure that the desired password is entered in before pressing Enter.

10.3.2.3 Set the Time and Date

Searchline Excel Plus & Searchline Excel Edge have a real time clock, which is factory set to UTC time.

⚠CAUTION

Do NOT set HART to non-UTC time. The Fixed Platform App auto-translates detector's UTC timestamps to local timestamps. Changing detector's UTC setting may cause connection issues.

1. Select **Device Setup**.
2. Select **Account**.
3. Select **Set Time.**
4. Enter the correct time (24 hour format) and press **Enter**.
5. The display shows a confirmation message, press **OK**.
6. Select **Set Date**.
7. Enter the correct date (dd/mm/yyyy format) and press **Enter**.
8. The display shows a confirmation message, press **OK**.
9. Press **Back** to return to the Device Setup menu.

10.3.3 Configure Warning, Inhibit and Over-range Signal Levels

The Warning, Inhibit and Over-range signal levels can be changed from the default values.
The default levels and ranges are:

Parameter	Default	Range
Fault	1 mA	0 mA to 3.6 mA
Inhibit	2 mA	1 mA to 3.6 mA
Warning	3 mA	1 mA to 4 mA
Beam Block Warning	2.5 mA	1 mA to 4 mA
Over-range	21 mA	20 mA to 22 mA

The tolerance on the nominal current output value is ± 0.2 mA.

1. Select **Device Setup**.
2. Select **Settings**.
3. Select **mA Loop**.
4. Select **Inhibit Level**.
5. Enter the new value for the current within the allowed range and press **Enter**.
6. Select **Warning Level**.
7. Enter the new value for the current within the allowed range and press **Enter**.
8. Select **Over Range Level**.
9. Enter the new value for the current within the allowed range and press **Enter**.
10. Press **Back** to return to the Settings menu.

Note:
If a value is sent which is outside the allowed range, it will be rejected. Searchline Excel Plus & Searchline Excel Edge will offer the option to restore the previous value or re-enter another value.

10.3.4 Configure Device Identification Information

Searchline Excel Plus & Searchline Excel Edge can hold information programmed by the user, such as an identification number (tag) or site specific details.
Five text fields are available:

- Description – up to 16 characters
- Assembly Date – mm/dd/yy
- Assembly Number – up to 8 characters
- Short Tag - up to 8 characters
- Long Tag – up to 32 characters

The fields for Description, Assembly Date and Assembly Number are undefined until they have been configured.

Note:
Short Tag and Long Tag are commonly used by HART hosts to identify individual devices (even when a handheld device is connected directly to Searchline Excel Plus & Searchline Excel Edge). These fields must not be left blank.

1. Select **Device Setup**.
2. Select **Settings**.
3. Select **HART**.
4. Select **Configure HART**.
5. Select **Description**.
6. Enter required information up to 16 characters (for example the device type) and press **Enter**.
7. Select **Assembly Date**.
8. Enter required information in the format mm/dd/yy (for example the date of installation) and press **Enter**.
9. Select **Assembly Number**.
10. Enter required information up to 8 characters (for example a number related to the installation) and press **Enter**.
11. Select **Short Tag**.
12. Enter required information up to 8 characters (for example a unique device identification number) and press **Enter**.
13. Select **Long Tag**.
14. Enter required information up to 32 characters (for example the device location) and press **Enter**.

15. Press **Send** to send the information to Searchline Excel Plus & Searchline Excel Edge.
16. Return to the home screen.

10.3.5 Test 4–20 mA Loop Integrity

It is recommended that the 4–20 mA loop integrity is tested by setting the Searchline Excel Plus & Searchline Excel Edge to output an over-range current. This will confirm that there are no faults in the system that would cause a current limit.

Note:
By default, this function will timeout after 10 minutes of inactivity.

Note:
When connecting or disconnecting a multimeter, power off the Searchline Excel Plus & Searchline Excel Edge, otherwise the detector will indicate a fault warning that the 4–20 mA loop was broken.

1. Select **Device Setup**.
2. Select **Operations**.
3. Select **Output Test**.
4. Select **Force Loop**.
5. Select **Apply Force Loop**.
6. Select between **4 mA**, **20 mA** or **Custom**.
7. The display shows a warning message, press **OK**. Searchline Excel Plus & Searchline Excel Edge will now output the chosen value in mA.
8. Select **End**.
9. The display shows a note that the Searchline Excel Plus & Searchline Excel Edge will return to normal operation, press **OK**.

Note:
If the current at the controller is not correct, check the 4–20 mA loop connections and cabling, and check that the loop resistance is less than 600 Ω. In current source mode, for supply voltages of 18 to 20 Vdc the maximum loop resistance is 500 Ω.

Note:
If the product cannot generate the required output current it will move to a fault condition after a short period of time.

10.3.6 Configure Internal Alarm Threshold

The internal alarm setpoint is used to log events when the gas detection reading has exceeded the threshold. It is also used as the value to simulate Alarm.

1. Select **Device Setup**.
2. Select **Settings**.
3. Select **Alarms**.
4. Select **Configure Alarms**.
5. Select **Change Alarm Set Point**.
6. Enter new value. Press **Enter**, then press **Save** to send the information to Searchline Excel Plus & Searchline Excel Edge.
7. Return to the home screen.

10.3.7 Clear Alarm Latch

During commissioning alarm or fault latches may be generated. This will be indicated by the 4–20 mA output signal. Use the procedure below to clear them.

1. Select **Device Setup**.
2. Select **Diagnostics**.
3. Select **Active Faults** or **Active Warnings** to check for any faults or warnings.
4. Select **First** or **Next** to display the fault or warning.

Note:
"First" displays the active fault or warning that occurred earliest in time. "End of list" means that the last fault or warning has been reached.

5. Press **OK** and use the back button to return to Diagnostics menu.

Note:
If no active faults or warnings are present, the 4–20 mA output signal may have latched due to an earlier alarm that has now cleared.

6. Press **Back** to return to the Device Setup menu.
7. Select **Operations**.
8. Select **Clear Latch**.
9. Press **OK** to initiate a Device Reset, which will clear any latched faults or warnings.

Note:
If any configuration changes have been made, wait 15 seconds before doing a soft reset or cycling the power.

10. The display shows a confirmation message. Press **OK**.
11. Return to the home screen.

10.4 Maintenance using HART Communications

Note:
The instructions that follow assume that a suitable HART host (handheld or PC) is connected to the Searchline Excel Plus & Searchline Excel Edge and that the user is logged in 'Engineer' profile access privileges.

This section explains how to perform common maintenance operations. Please refer to IEC/EN 60079-29-2 or other local or national regulations for guidance on establishing an appropriate maintenance routine.

Inspection	How to check for damage and clean the unit
Proof Test (Gas Detection Challenge)	How to carry out a gas detection test using functional test filters
Investigation of Faults or Warnings	How to view Faults and Warnings

⚠CAUTION

After changing any parameter, poll the Searchline Excel Plus & Searchline Excel Edge and verify that the received value is correct.

10.4.1 Inspection

Searchline Excel Plus & Searchline Excel Edge should be inspected periodically and cleaned if necessary. The required frequency of inspection will depend on local site conditions and will need to be established through experience.

⚠CAUTION

Gas leak alarms may be generated during this procedure. Follow the steps to inhibit the 4–20 mA output.

⚠WARNING

Ensure that the detector is not unintentionally left in an inhibit state.

1. Select **Device Setup**.
2. Select **Operations**.
3. Select **Inhibit Detector**.
4. Select **Start Inhibit**.
5. Press **OK** to confirm.
6. A confirmation message is shown informing that Inhibit Mode is started. Press **OK**. The 4–20 mA output is now inhibited. Inspect the Searchline Excel Plus & Searchline Excel Edge unit and cabling for any signs of physical damage.
7. Clean any dust or dirt from the Searchline Excel Plus & Searchline Excel Edge unit using soapy water and a soft cloth.
8. Select **Device Setup**.
9. Select **Operations**.
10. Select **Clear Latch** to clear any faults or warnings that may have been generated by cleaning.
11. Press **OK** to confirm the operation.

12. The display shows a confirmation message. Press **OK**.
13. The display shows a note that the Searchline Excel Plus & Searchline Excel Edge will return to normal operation, press **OK**.

10.4.2 Proof Test (Gas Leak Challenge)

Searchline Excel Plus & Searchline Excel Edge can be functionally checked using functional test filters.
Refer to the *Maintenance* chapter of this manual for more instructions.

10.4.3 Investigation of Faults or Warnings

If the detector is signalling Fault or Warning on the 4–20 mA output, the problem should be investigated and remedied as soon as possible.

1. Select **Device Setup**.
2. Select **Diagnostics**.
3. Select **Active Faults** or **Active Warnings** to check for any faults or warnings.
4. Select **First** or **Next** to display the fault or warning.

Note:
First displays the fault or warning that occurred earliest in time.

5. Press **Back** to return to the Device Setup menu.
6. Select **Operations**.
7. Select **Clear Latch**.
8. Press **OK** to initiate a Device Reset, which will clear any latched faults or warnings.

Note:
If any configuration changes have been made, wait 15 seconds before doing a soft reset or cycling the power.

9. The display shows a confirmation message. Press **OK**.
10. Return to the home screen.

Note:
If any configuration changes have been made, wait 15 seconds before doing a soft reset or cycling the power.

11. The display shows a confirmation message. Press **OK**.
12. The display shows a note that the Searchline Excel Plus & Searchline Excel Edge will return to normal operation, press **OK**.
13. Return to the home screen.

10.5 Modbus

The Searchline Excel Plus & Searchline Excel Edge detector provides a facility for Modbus digital communication between Searchline Excel Plus & Searchline Excel Edge and an external controller. Modbus is a widely-supported digital data communication protocol that provides a standardised set of data communication protocols. The principal features of the Modbus Interface are:

- Operates as a Modbus Remote Terminal Unit (RTU) responder device node.
- Supports functions 03 and 06 of the Modbus protocol.
- Provides gas concentration reading and alarm status for Inhibit, Fault, Alarm and Warning.
- RS-485 half-duplex communication with multi-drop capability.
- Asynchronous serial link configurable for baud rate and parity.

NOTE
The Modbus broadcast commands are not supported and will be ignored.

10.5.1 Programming the Host

The host computer system must be programmed to interpret the signal and status data received from Searchline Excel Plus & Searchline Excel Edge as there is no standard Modbus format for the communication of data from gas leak detection systems.

It is recommended that the host computer system should, as a minimum, be programmed to use Function 03 to collect alarm and status data from Searchline Excel Plus & Searchline Excel Edge.

Full details of the Modbus protocol can be found in the Modicon Modbus Protocol Reference Guide PI-MBUS-300 available at www.modbus.org.

⚠CAUTION

Modbus does not work if TDA and TDB (A in and B in) pins are transposed.

10.5.2 Addressing Conventions and Register Values

The addressing conventions and register values used follow those set by Modicon.

4xxxx – The Holding registers are used to read Searchline Excel Plus & Searchline Excel Edge alarm status and few configuration parameters. An address range is used to query the event record and store the result.

The write-only registers can be written singly using Function code 06.

Modbus communication settings can be updated using the write registers.

10.5.3 Modbus Cables

The cable should be an RS-485 shielded data communication cable suited to the installation distance, ambient and environmental factors.

Note:
- Spurs shall not be longer than 1m (39 in.) each, and shall not exceed 10m (33 ft.) combined total.
- The maximum cable length without line repeaters is 1.2km (3900ft).
- The minimum wire size is 1.5 mm^2 (15 AWG), maximum is 2.5 mm^2 (13 AWG).

10.5.4 Modbus Electrical Connections

Modbus connections are provided through the terminals in the wiring compartment of the Searchline Excel Plus & Searchline Excel Edge detector. Details of the wiring connections can be found in Section 6.2.1 of this manual.

10.5.5 Modbus Termination Resistor

If Searchline Excel Plus / Edge is the last node in a Modbus system highway a 120 Ω termination resistor between A and B must be fitted to avoid reflections on the RS-485 circuit.

Note
The 120 Ω termination resistor is NOT supplied.

10.5.6 Modbus Multi-Drop Mode

A maximum of 32 nodes (1 controller, 31 responders) are supported in a multi-drop installation.

10.5.7 Modbus Protocol

Authoritative information on the Modbus protocol can be found at www.modbus.org.

Supported baud rates are 9600 and 19200 with 9600 as the default (none parity, 1 stop bit) and follower addresses set as 1 by default.

Status reading and configuration of important parameters (adjustable with Honeywell Fixed Platform App and HART) can also be performed using the Modbus interface. This appendix describes only how to monitor Searchline Excel Plus & Searchline Excel Edge status using Modbus.

10.5.8 Modbus Registers

Modbus Holding Register Address			Register Type	Parameter Description	Additional Description	Notes
First	Last	Qty				
40001	40001	1	r	Modbus responder address	MSB -> 0x28 LSB -> Responder address (1 to 247, address 60 excluded)	Note 5
40002	40002	1	r	Detector Id	Identical to 40001	Note 5
40003	40004	2	r	Gas reading	Reported gas concentration	
40005	40005	1	r	Reserved	------	Note 13
40006	40006	1	r	Detector detail status	*see notes	Note 3
40007	40007	1	r	Operating state	*see notes	Note 8
40008	40008	1	r	Heart Beat	low 16 bits of SDS variable	
40009	40009	1	r	Discrete or proportional	0=discrete, 1=proportional	
40010	40010	1	r	Alarm Latch config	mask of individual alarm latches	
40011	40011	1	r	Measurement unit	------	Note 4
40012	40014	3	r	Relay status(Active/Inactive)	0=deenergized, 1=energized	
40015	40015	1	r	ADC Temp. Sensor	------	
40016	40016	1	r	PSU1 Temp. Sensor	------	
40017	40017	1	r	AFE Temp. Sensor	------	
40018	40030	13	r	Device Name	From Bluetooth	Note 16
40031	40035	5	r	Reserved	------	
40036	40036	1	r	Sensor type	------	Note 15
40037	40038	2	r	mA Output	mA Output readback current	
40039	40039	1	r	Voltage monitor	24V_PROT_SW	Note 17
40040	40040	1	r	Voltage monitor	5V0_SAFE	Note 17
40041	40041	1	r	Voltage monitor	12V_SAFE	Note 17
40042	40042	1	r	Voltage monitor	3V3_SAFE	Note 17
40043	40043	1	r	Voltage monitor	12V	Note 17
40044	40044	1	r	Voltage monitor	3V3	Note 17
40045	40045	1	r	Voltage monitor	5V0	Note 17
40046	40046	1	r	Voltage monitor	1V2_SAFE	Note 17
40047	40047	1	r	Voltage monitor	+5V_HTR	Note 17
40048	40052	5	r	Reserved	------	
40053	40059	7	r	Reserved	------	
40060	40060	1	r	Voltage monitor	+INTRA_1V2	Note 17
40061	40061	1	r	Configuration counter	From HART	

Modbus Holding Register Address First	Last	Qty	Register Type	Parameter Description	Additional Description	Notes
40062	40074	13	r	Reserved	------	
40075	40081	7	r	Serial number	------	Note 16
40082	40083	2	r	Reserved	------	
40084	40084	1	r	Detector version	Hw	
40085	40085	1	r	Detector version	Sw	
40086	40088	3	r	Voltage monitor	[10] = reserved, [11] = reserved, [12] = +3V3_AFE	Note 17
40089	40090	2	r	mA - A1 level	Alarm1/Pre-alarm	
40091	40092	2	r	mA - A2 level	Alarm2/Alarm	
40093	40094	2	r	mA - A3 level	Test signal 2	
40095	40096	2	r	mA - A4 level	Overrange	
40097	40098	2	r	Reserved	------	
40099	40102	4	r	Reserved	------	
40103	40104	2	r	Reserved	------	
40105	40106	2	r	Reserved	------	
40107	40108	2	r	Alarm threshold	Alarm1 set point	
40109	40110	2	r	Alarm threshold	Alarm2 set point	
40111	40112	2	r	Reserved	------	
40113	40114	2	r	Timestamp of last bump test	------	
40115	40115	1	r	Proof test interval	------	
40116	40122	7	r	Reserved	------	
40123	40123	1	r	Relay congfiguration	Default state of relay1, Default state of relay2, Default state of relay3, Relay1 latch on/off, Relay2 latch on/off, Relay3 latch on/off	Note 6
40124	40142	19	r	Reserved	------	
40143	40144	2	r	Timestamp	Current RTC timestamp in UTC	
40145	40145	1	r	Reserved	------	
40146	40154	9	r	Event block - read	Event data - one record in event history	Note 2
40155	40155	1	w	Event command	Event command - request	Note 10
40156	40156	1	w	Modbus responder address	------	
40157	40157	1	w	Baudrate	1 - 9600, 2 - 19200, 0 - 76800 (this baud rate is only to support fp2 s/w) Note: Modbus will work only with baudrates 9600 and 19200	
40158	40158	1	w	Parity	0 - Even; 1 - Odd; 2 - None	
40159	40159	1	w	Stop bits	0 = 1 Stop bit; 1 = 2 Stop bits	

Note 2 - Events response format

2 registers	Date/Time
1 register	Event category; 1=alarm; 2=fault; 3=warning; 5=informational
2 registers	Event type
2 registers	Argument 1
2 registers	Argument 2

Note 3 - Meaning of Detector detail status (bits derived from U8_OPRST_DETAIL_STATUS)

bit 0	Alarm1/Pre-alarm is active	bit 8	Inhibit
bit 1	Alarm2/Alarm is active	bit 9	Alarm0/Test signal1
bit 2	Overrange	bit 10	Alarm3/Test signal2
bit 3	for future expansion	bit 11	for future expansion
bit 4	Warning is active	bit 12	for future expansion
bit 5	Fault is active	bit 13	for future expansion
bit 6	for future expansion	bit 14	for future expansion
bit 7	for future expansion	bit 15	for future expansion

Note 4 - Definition of Measurement unit

0	invalid
12	flame detected bit
13	[dB] leak detected ultrasonically
14	[LEL.m] leak detected via open path infrared
15 to 255	for future expansion

Note 5 - Meaning of iInstID_Addr

Instrument	MSByte	LSByte
XNX	0x24	Modbus Address
XCD	0x25	Modbus Address
FSX Plus	0x26	Modbus Address
Searchline Excel Plus & Searchline Excel Edge	0x27	Modbus Address
Searchzone Sonik	0x28	Modbus Address

Note 6 - Definition of Relay configuration

bit num	name	def. val	0 - De-energized 1 - Energized 0 - Non-latching 1 - Latching
bit 0	Relay 1 Energized/De-energized	1	
bit 1	Relay 2 Energized/De-energized	0	
bit 2	Relay 3 Energized/De-energized	0	
bit 3	Relay 1 Latch	0	
bit 4	Relay 2 Latch	0	
bit 5	Relay 3 Latch	0	
bit 6	reserved		
bit 7	reserved		
bit 8	reserved		
bit 9	reserved		
6 to 15	unused in Searchline Excel Plus or Edge		

Note 8 - Definition of U8_OPRST_OPERATING_STATE

Value	Precedence	Meaning
0	n/a	reserved
1	8	normal monitoring
2	7	warm-up/start-up
3	6	inhibit
4	1	alarm
5	2	not used
6	3	not used
7	5	warning
8	4	fault
9 to 255	n/a	for future expansion

Note 9 - Definition of wRelayState

Bit	Meaning
0	Relay1
1	Relay2
2	Relay3
3-7	for future expansion

Note 10 - Definition of wCommands

Command	Value of wCommand (MSB byte, LSB byte)
no operation	NA
end Inhibit	NA
start Inhibit	NA
reset alarms and faults	NA
get newest record	Group, 0x18
get oldest record	Group, 0x19
get next newer event	Group, 0x1A
get next older event	Group, 0x1B
for XNX future expansion	all others
	Group definition: Group value can be set from 0 to 2 Group 0 – internal and security events (and all other uncategorised events) Group 1 – alarm and proof test events Group 2 – service events

Note 13 - Meaning of iFaultWarnNumber

Value	Interpretation
0	No fault or warning exists
1 to 999	No fault exists. The warning number is reported
1000 to 1999	A fault exists. Fault number plus 900 is reported

Note 15 - Meaning of iSensorType

0	invalid, no sensor found of mV default
1 to 7	for XNX
8	Triple IR flame detector
9	UV/IR flame detector
10	Ultrasonic gas leak detector
11	Open path infrared gas leak detector
12 to 255	For future expansion

Note 16 - The register is used to store two ASCII codes. String is encoded to registers the way, it is sent in right order.

Note 17 - The float value of voltage/temperature is multiplied with 100 to get 2 decimal points (e.g., 3.2 should be read as 320).

11 Problem Solving

11.1 Introduction

It is recommended to use the **Honeywell Fixed Platform App** as the **primary** troubleshooting tool.
Optionally, a HART handheld unit can be used to carry out diagnostics at the receiver (with rear cover open), or remotely, or at a local HART junction box.

Refer to the troubleshooting table below for a list of problems, possible causes and remedy actions.

Note
The Searchline Excel detector continues to function as a gas detector while indicating Warning, although aspects of its performance may be reduced. A Warning is an indication of a potential future problem.

⚠CAUTION

1. Searchline Excel does not contain any user serviceable parts. Do not open the main enclosure. Doing so will invalidate the warranty. Front enclosures may be opened only for advised repair maintenance by an authorized and qualified person.
2. If a problem persists please contact Honeywell Analytics for advice, using the contact details given on the back page.

Have the following information to hand:

- A description of the application and the problem, including the steps taken in attempt to resolve it
- The serial number of the Searchline Excel unit (see the label on the end cap)
- The service log downloaded from the Honeywell Fixed Platform App
- Installation checklist (refer to Chapter 7 Alignment and Commissioning)

If connected to Searchline Excel using HART, search for the following information by selecting Device Info from the Device Setup menu:

- Dev id (unique Searchline Excel identification number)
- Fld dev rev (revision number of the HART EDD file)
- Software rev (Searchline Excel software revision number)
- Hardware rev (Searchline Excel hardware revision number)

3. Flamepaths are not to be repaired.
4. The equipment shall be connected to circuits providing Overvoltage Category II or better according to IEC/EN 60664-1.
5. To minimize the risk of electrostatic charge, provisions shall be made for an adequate grounding of the equipment, including accessories (e.g., sunshade). Equipment shall be installed in a manner so that accidental discharge shall not occur.

⚠CAUTION

Some types of faults and warnings will latch the 4–20 mA output and need to be cleared by a Reset, which will clear latched events. Faults and warnings will fail to clear if they are still active.

11.2 Problem Solving

Fault / Problem	Description	Remedial Action
Detector does not power up and does not follow the start-up cycle	Power supply is not available	Check that power is available and to specification
	Power supply is not within specification	Check that LED indicator is on
	Wiring connections are not made correctly	Check wiring connections
	External ambient temperature is below -55°C (-67°F) or above +75°C (+167°F)	Check the ambient operating temperature. When Ex certified equipment is operated outside its certified range, its type approval certification is invalidated along with its warranty. Such equipment should be removed from service in potentially explosive atmospheres
	External ambient temperature is below -30°C (-22°F) but above -55°C (-67°F)	When external temperature is below -30°C (-22°F) the detector appears as not being powered during its warm-up phase. LED status indicator is powered off, relays de-energized and mA output is 0 mA. Internal heaters are active and after a heat-up period the detector initiates standard start-up cycle. Warm-up period duration depends on external ambient temperature, to a maximum of 30 minutes at -55°C (-67°F). A good indication of the heaters being active is the detector increased power consumption of approximately 15 W
	Internal non-recoverable fault	Return the detector to authorized service
Detector powers up and goes through start-up sequence, then shows fault (LED indicator goes amber)	Power supply is not within specification	Check that power is to specification
	mA loop is not wired correctly	Check the mA loop wiring and rectify as necessary
	mA loop external power supply and loop impedance is not to specification	Check that mA loop external power supply and loop impedance is to specification
	Power On Self Test failed	Interrogate event log to determine which diagnostic failed Re-power the detector and check if the fault clears Otherwise return the detector to authorized service
Detector shows fault but power and mA are correct	Diagnostic failure	Power cycle the detector Run diagnostics with the Fixed Platform App Return the detector to authorized service
	Resistor is not fitted between mA- and 0 Vdc or between mA+ and +24 Vdc terminals	Add a suitable load resistor between mA- and 0 Vdc or between mA+ and +24 Vdc terminals
Detector shows warning	Ambient operating temperature	Check location for heat sources Fit with a sunshade or other protection Change detector location
Detector is in inhibit state	Detector has been inhibited by the Fixed Platform App or by HART hand held device	Release the output from inhibit state using the Fixed Platform App or HART hand held device
	Force command has been given by the Fixed Platform App or HART hand held device	
4–20 mA output appears to be unstable	Electrical interference being induced on 4–20 mA cabling	Check for earth loops Confirm that the cable screen is earthed correctly Investigate noise on the signal using an oscilloscope For noisy installations, consider using filtering and signal processing at the control card
	Poor contacts	Check terminal connections If necessary tighten the connectors Excessive vibration can loosen connections Identify and minimise potential sources of vibration

Fault / Problem	Description	Remedial Action
4–20 mA output is in fault	4–20 mA loop wiring has been disturbed	Check 4–20 mA loop is correctly connected and terminated Reset the fault using the Fixed Platform App or HART If the fault persists, power cycle the detector If the fault still persists, contact Authorized Service
4–20 mA output is <= 1 mA	Detector is in Fault	Run diagnostics with the Fixed Platform App
	Beam is blocked	Check that beam path is clear from the Transmitter to the Receiver. Remove any obstruction if present.
	Transmitter or Receiver is misaligned	1) Connect to the Fixed Platform App and check the alignment status 2) If alignment status is showing receiver misalignment, use the alignment scope and Fixed Platform App to optimise Receiver alignment 3) If alignment status is showing transmitter misalignment after re-aligning Receiver, check the Transmitter alignment 4) Re-zero the unit after alignment
	Electrical installation problem	1) Check that the +24 V supply is reaching the unit. Voltage at the unit should be between +18 V and +32 V 2) Check cables and connections to the unit, especially the 4-20 mA loop connections 3) Check that the unit has the correct type of 4–20 mA output for use with the controller that it is connected to
	Heavy contamination of optics	Check the Transmitter and Receiver windows for build up of contamination. Clean the windows if required. Re-zero unit.
	Very low visibility along beam path due to dense fog, blizzard or sand-storm conditions	1) Check that the Transmitter can be seen from the Receiver. If Transmitter can be seen, even with some difficulty, low visibility is unlikely to be the problem. 2) If the Transmitter cannot be seen from the Receiver, very low visibility could be the problem. Wait until visibility improves and verify that the unit then returns to operational status.
4–20 mA output is 2 mA (INHIBIT)	Unit has been inhibited by Fixed Platform App	Release output from INHIBIT state using Fixed Platform App
	Unit is executing power-up routine	1) Wait for 1 minute. When power-up routine is completed satisfactorily the unit's output should exit the INHIBIT state 2) If unit remains in INHIBIT, check the +24 V supply is reaching the unit. If the voltage is below +18 V or is fluctuating above and below +18 V, the unit may be being prevented from completing power-up. (This is an electrical installation problem.)

Fault / Problem	Description	Remedial Action
4–20 mA output is 3 mA (WARNING)	Heavy contamination of optics	Check the Transmitter and Receiver windows for build up of contamination. Clean the windows if required. Re-zero unit.
	Transmitter or Receiver is misaligned	1) Connect to the Fixed Platform App and check the alignment status 2) If alignment status is showing receiver misalignment, use the alignment scope and Fixed Platform App to optimise Receiver alignment 3) If alignment status is showing transmitter misalignment after re-aligning Receiver, check the Transmitter alignment 4) Re-zero the unit after alignment
Zeroing failure	Failure to meet the acceptable criteria for zeroing	1) Check that the correct range has been entered for the installed path length 2) Check that the path length setting corresponds to the actual installation distance 3) Check that the alignment of the Receiver has been fully optimised. 4) Check the alignment of the Transmitter 5) Check that there are no objects obscuring part or all of the beam path 6) Check that the windows of both the Receiver and the Transmitter are clean 7) Check that the structures that the Transmitter and Receiver are mounted on are stable and free from significant angular movement/vibration 8) Check that there is no gas in the beam preventing successful zeroing 9) Installation will fail in conditions of low visibility or fluctuating atmospheric transmission that degrades signal quality. Do not attempt installation during conditions of heavy rain, snow or fog
No signal or very low signal at Receiver	Receiver misaligned	Re-align the Receiver, first using the alignment scope and then using the Fixed Platform App
	Transmitter misaligned	Re-align the Transmitter using the alignment scope
	The beam path has become obscured	Check that the beam path is clear from Transmitter to Receiver. Remove any obstruction if present
	No output from Transmitter	1) Check that the Transmitter is flashing. If LED indication is enabled on the Transmitter, it shall indicate steady green light. If the green light is flashing, the Transmitter might be faulty. In this case, contact an authorised service centre. Alternatively, listen for a distinct ticking sound when the lamp flashes. Note: The infrared beam is invisible and eye safe. 2) If the Transmitter is not flashing, check that the +24 V supply is reaching the Transmitter correctly

Fault / Problem	Description	Remedial Action
Unit does not respond exactly as expected to	Functional test filters are only an approximate simulation of gas	Searchline Excel units are calibrated on real gas. This results in a variation of the response test filters of different Excel units to functional test filters. Refer to Chapter 9.3. 1) Check that the response to the test filters is within the limits stated in this manual. Refer to Chapter 9.3. 2) Check that the value being used for response testing corresponds correctly to the target gas that the unit has been calibrated for
	Receiver misaligned	1) Use the alignment scope and Fixed Platform App to optimise Receiver alignment. 2) Re-zero the unit
	Contamination on windows	1) Check the Transmitter and Receiver windows for build up of contamination. Clean windows if required. Refer to Chapter 9.1. 2) Re-zero the unit
	Drift of unit's zero position	1) Verify that there is no gas in the beam path. 2) Re-zero the unit
Unit appears to be reporting a negative gas reading on the 4–20 mA	Misinterpretation of FAULT, INHIBIT, or WARNING currents on the 4–20 mA output	Searchline Excel does **not** report negative gas readings on the 4–20 mA output. 1) Configure controller to interpret and present currents below 4 mA correctly, or 2) Familiarise operators with the interpretation of sub-4 mA output currents from Excel as follows: FAULT 1 mA INHIBIT 2 mA WARNING 3 mA* or, 3) Reconfigure the FAULT, INHIBIT, and WARNING currents output by the Excel unit.
Diagnostics report Neg Gas Reading	Receiver misaligned	1) Re-align the Receiver, first using the alignment scope and then using the Fixed Platform App 2) Re-zero the unit
	Contamination of windows	1) Check the Transmitter and Receiver windows for build up of contamination. Clean windows if required. Refer to Chapter 9.1 2) Re-zero the unit
	Negative drift of unit's zero position	Re-zero the unit
Diagnostics report Baseline Drift	Receiver misaligned	1) Re-align the Receiver, first using the alignment scope and then using the Fixed Platform App 2) Re-zero the unit
	Contamination of windows	1) Check the Transmitter and Receiver windows for build up of contamination. Clean windows if required. Refer to Chapter 9.1 2) Re-zero the unit
	Drift of unit's baseline	Re-zero the unit

Fault / Problem	Description	Remedial Action
Diagnostics report Bad Temperature	Unit has been operated at a temperature outside its specified and certified range	1) When Ex certified equipment is operated outside its certified range, its type approval certification is invalidated along with its warranty. Such equipment should be removed from service in potentially explosive atmospheres. 2) Investigate the cause of the excessive temperature excursion and take steps to prevent recurrence. (e.g. fit sunshade or heat-shield, or relocate detector, etc.)
Detector indicates Fault following an over-range condition	After over-range cleared, detector indicates Fault for another 30 seconds	The over-range condition indicates that the detector gas reading is higher than 5 LELm. This should be immediately investigated. The fault indication is an intended result of the detector reporting over-range and will clear automatically 30 seconds after the alarm condition is cleared
Modbus communication error	Incorrect communication connection	Check that detector RS-485 A and B wires have been connected to the correct terminals of the controller Check if baud rate is set up correctly Check if data format is set up correctly Check if address is set up correctly
	Detector is not powered up	Check that power is available and to specification
	No termination of long cable run	For cable runs longer than 100 m use termination resistors 120 Ohm connected between RS-485 A and B wires at each end of the communication bus
	Incorrect wiring topology	Check that any spurs are less than 1 m in length and do not exceed the total length limit of 10 m.
Detector fails to raise alarm	Alarm threshold set too high	Review product settings, ensure correct alignment between Transmitter and Receiver
Fixed Platform App reports do not show time and date stamp	No information on time and date of creation is given in the Fixed Platform App report	Internal battery cell has to be replaced. Return the detector to authorized service
Detector registration failed	Incorrect entry of registration details	Check if registration details have been correctly entered
	Invalid registration details	Check if registration details are valid for the intended detector
	Detector already registered	Check if the detector has not already been registered to the same or other company

12 Certification and Approvals

The Searchline Excel Plus and Searchline Excel Edge flammable gas detectors have attained the below listed approvals as of the date of this publication:

Hazardous Locations

12.1 ATEX and UKCA Certification

 II 2GD

DEMKO 20 ATEX 2281X UL21UKEX2047X

(Ex d install) Ex db ia op is IIC T4 Gb (Ta -55°C to +75°C) or

(Ex de install) Ex db eb ia op is IIC T4 Gb (Ta -55°C to +75°C)

Ex ia op is tb IIIC T100°C Db (Ta -55°C to +75°C)

Um = 250 Vrms

CENELEC standards:

- CENELEC EN IEC 60079-0, Explosive atmospheres - Part 0: Equipment - General Requirements (2018)
- CENELEC EN 60079-1, Explosive Atmospheres - Part 1: Equipment Protection by Flameproof Enclosures “D”, (2014)
- CENELEC EN 60079-7, Electrical Apparatus for Explosive Gas Atmospheres. Part 7, Increased Safety “E”, (2015)
- CENELEC EN 60079-11, Explosive atmospheres - Part 11: Equipment protection by intrinsic safety “i”, (2012)
- CENELEC EN 60079-28, Explosive Atmospheres - Part 28: Protection of Equipment and Transmission Systems Using Optical Radiation (2015)
- CENELEC EN 60079-31, Explosive Atmospheres - Part 31: Equipment Dust Ignition Protection by Enclosure “T”, (2014)

12.2 IECEx Certification

IECEx UL 20.0009X

(Ex d install) Ex db ia op is IIC T4 Gb (Ta -55°C to +75°C) or

(Ex de install) Ex db eb ia op is IIC T4 Gb (Ta -55°C to +75°C)

Ex ia op is tb IIIC T100°C Db (Ta -55°C to +75°C)

Um = 250 Vrms

IEC Standards:

- IEC 60079-0, Explosive atmospheres – Part 0: Equipment – General requirements, Edition 7, (2017)
- IEC 60079-1, Electrical Apparatus for Explosive Gas Atmospheres - Part 1: Flameproof Enclosures “D”, Edition 7, (2014)
- IEC 60079-7, Electrical Apparatus for Explosive Gas Atmospheres. Part 7, Increased Safety “E”, Edition 5.1 (2017)
- IEC 60079-11, Explosive Atmospheres - Part 11: Equipment Protection by Intrinsic Safety “I”, Edition 6, (2011)
- IEC 60079-28, Explosive Atmospheres - Part 28: Protection of Equipment and Transmission Systems Using Optical Radiation, Edition 2, (2015)
- IEC 60079-31, Explosive Atmospheres - Part 31: Equipment Dust Ignition Protection by Enclosure “T”, Edition 2, (2013)

12.3 cULus Certification

Cl. I, Div.1, Gr. B,C,D, T4 (Ta -55°C to +75°C)

Cl. II, Div.1, Gr. E,F,G, T4 (Ta -55°C to +55°C)

Cl. III

Cl. I, Zn. 1 AEx db ia op is IIC T4 Gb (Ta -55°C to +75°C)

Cl. I, Zn. 1 AEx db eb ia op is IIC T4 Gb (Ta -55°C to +75°C)

Zn. 21 AEx ia op is tb IIIC T100°C Db (Ta -55°C to +55°C)

Ex db ia op is IIC T4 Gb X (Ta -55°C to +75°C)

Ex db eb ia op is IIC T4 Gb X (Ta -55°C to +75°C)

Ex ia op is tb IIIC T100°C Db X (Ta -55°C to +55°C)

Um = 250 Vrms

UL standards:

- UL 60079-0, Explosive Atmospheres - Part 0: Equipment - General Requirements, Edition 7 (2020)
- UL 60079-1, Standard for Explosive Atmospheres Part 1: Equipment Protection by Flameproof Enclosures d, Edition 7 (2020)

- UL 60079-7, Standard for Explosive Atmospheres - Part 7: Equipment Protection by Increased Safety ''E'', Edition 5 (2017)
- UL 60079-28, Explosive Atmospheres - Part 28: Protection of Equipment and Transmission Systems Using Optical Radiation, Edition 2 (2020)
- UL 60079-31, Explosive Atmospheres - Part 31: Equipment Dust Ignition Protection by Enclosure “t”, Edition 2 (2020)
- UL 61010-1, Safety Requirements for Electrical Equipment for Measurement, Control, and Laboratory Use - Part 1: General Requirements, Edition 3rd (2019)
- UL 1203, ExplosionProof and Dust-IgnitionProof Electrical Equipment for Use in Hazardous (Classified) Locations, Edition 5 (2020)
- UL 913, Intrinsically Safe Apparatus and Associated Apparatus for Use in Class I, II, and III, Division 1, Hazardous (Classified) Locations, Edition 8 (2019)

12.4 INMETRO Certification

Not applicable at the moment.

12.5 Labelling

ATEX / IECEx certification label

Searchline Excel Plus – Receiver

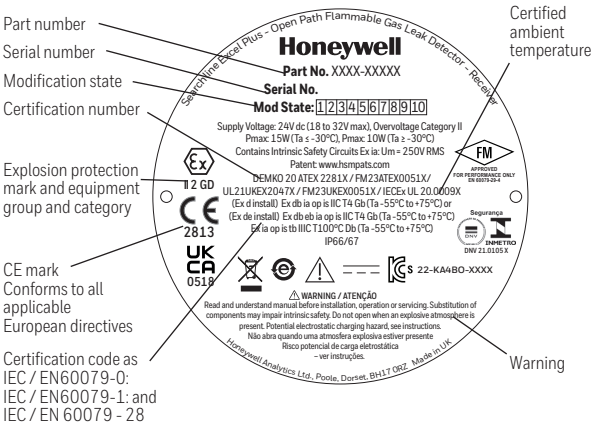

Searchline Excel Edge – Receiver

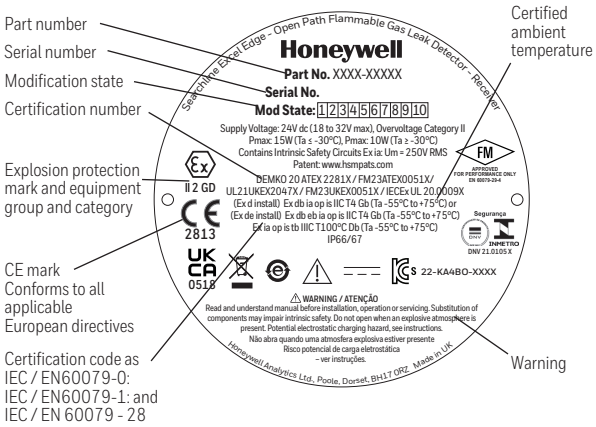

cULus certification label

Searchline Excel Plus – Receiver

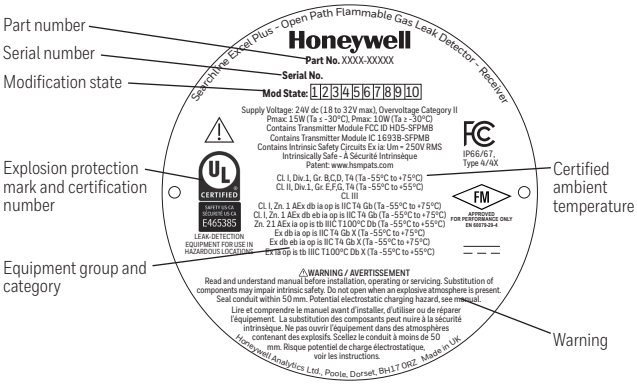

Searchline Excel Edge – Receiver

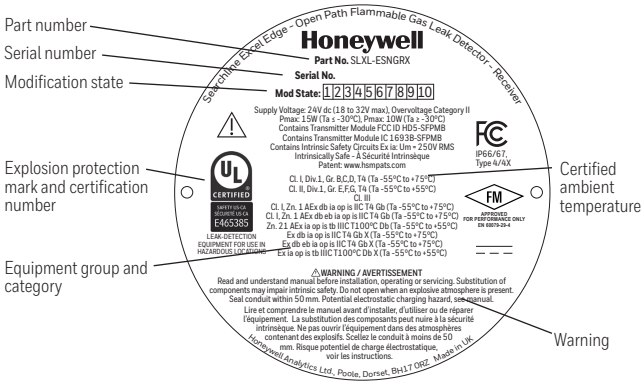

12.6 EU Declaration of Conformity

SIMPLIFIED EU DECLARATION of CONFORMITY

Hereby and as of the date of this publication, Honeywell declares that the Searchline Excel equipment is in compliance with Directive 2014/53/EU. The full text of the EU declaration of conformity is available at: www.sps.honeywell.com

12.7 RoHS

As of the date of this publication, Searchline Excel Plus and Searchline Excel Edge are compliant with all requirement and exemption set by the European RoHS 2.0 Directive 2011/65/EU and the European Delegated Directive (EU) 2015/863.

12.8 China RoHS

As of the date of this publication, Searchline Excel Plus and Searchline Excel Edge are compliant with all requirement and exemption set by the China RoHS 2.0 Directive (2016).



12.9 WEEE



EU Directive 2012/19/EU: Waste Electrical and Electronic Equipment (WEEE)
This symbol indicates that Searchline Excel must not be disposed of as general industrial or domestic waste. Searchline Excel should be disposed of through suitable WEEE disposal facilities. For more information about disposal of Searchline Excel, contact your local authority, distributor or the manufacturer.

12.10 EMC

As of the date of this publication, Searchline Excel Plus and Searchline Excel Edge are compliant with all requirement and exemption set by the Electromagnetic Compatibility (EMC) Directive 2014/30/EU.

12.11 RED

As of the date of this publication, Searchline Excel Plus and Searchline Excel Edge are compliant with all requirement and exemption set by the Radio Equipment Directive (2014/53/EU).

12.12 REACH

Hereby and as of the date of this publication, Honeywell declares that Searchline Excel Plus and Searchline Excel Edge fully comply with the related requirements of European Union Regulation (EU) 1907/2006 concerning the Registration, Evaluation, Authorization and Restriction of Chemicals (REACH).

12.13 FCC

Incorporates FCC: HD5-SFPMB

As of the date of this publication, this detector complies with part 15 of the FCC Rules. Operation is subject to the following two conditions:

1) This detector may not cause harmful interference, and

2) This detector must accept any interference received, including interference that may cause undesired operation.

This detector must not be co-located or operated in conjunction with any other antenna or transmitter. This equipment complies with FCC radiation exposure limits set forth for an uncontrolled environment. End users must follow the specific operating instructions for satisfying RF exposure compliance.

Note

This equipment has been tested and found to comply with the limits for a Class A digital device, pursuant to part 15 of the FCC Rules. These limits are designed to provide reasonable protection against harmful interference when the equipment is operated in a commercial environment.

Note

This equipment generates, uses, and can radiate radio frequency energy and, if not installed and used in accordance with the instruction manual, may cause harmful interference to radio communications. Operation of this equipment in a residential area is likely to cause harmful interference in which case the user will be required to correct the interference at his own expense.

⚠CAUTION

Changes or modifications not expressly approved by the manufacturer responsible for compliance could void the user's authority to operate the equipment.

12.14 IC

Incorporates IC: 1693B-SFPMB

⚠WARNING

Searchline Excel has been tested and meets applicable limits for radio frequency (RF) exposure. According to the RF Exposure report, minimum 20 cm separate distance is required.

Searchline Excel a été testé et respecte les limites applicables à l'exposition aux radiofréquences (RF). Selon le rapport d'exposition RF, un minimum de 20 cm de distance séparée est nécessaire.

As of the date of this publication, this detector complies with Industry Canada's lisence-exempt RSSs. Operation is subject to the following two conditions:

1) This device may not cause interference; and
2) This device must accept any interference, including interference that may cause undesired operation of the device

Le present appareil est conforme aux CNR d'Industrie Canada applicables aux appareils radio exempts de licence. L'exploitation est autorisee aux deux conditions suivantes:

(1) l'appareil ne doit pas produire de brouillage;
(2) l'utilisateur de l'appareil doit accepter tout brouillage radioelectrique subi, meme si le brouillage est susceptible d'en compromettre le fonctionnement.

12.15 Export Compliance Classification

As of the date of this publication, Searchline Excel Plus and Searchline Excel Edge have been classified as follows:

EU - No License Required (NLR)
US ECCN: 1A995.b

12.16 Wireless Approvals

As of the date of this publication, Searchline Excel Plus and Searchline Excel Edge have been approved and registered for use in the following countries:

Algeria*, Australia, Bahrain, Brazil, Brunei, China, Egypt*, India*, Indonesia, Iraq*, Israel, Japan*, Kazakhstan*, Korea, Kuwait, Malaysia,

Mexico, New Zealand, Oman, Pakistan*, Philippines*, Qatar, Russia*, Saudi Arabia, Singapore, South Africa*, Taiwan, Thailand, UAE,

Uzbekistan*, Vietnam*

*check with Honeywell for availability

12.17 Bluetooth®

Certified and registered Bluetooth SIG.

13 Ordering Information

Part Number	Description
INSTRUMENTS	
SLXL-PSMGXX	Searchline Excel Plus M25
SLXL-ESMGXX	Searchline Excel Edge M25
SLXL-PSNGXX	Searchline Excel Plus 3/4" NPT
SLXL-ESNGXX	Searchline Excel Edge 3/4" NPT

ACCESSORIES	
2331B1102	Pole Mount Kit for Universal Mounting Bracket
2331B1020	Large Adjustable Mounting Bracket Plate
2331B1112	Pole Mount Kit for Large Adjustable Mounting Bracket
2017B0113	Stainless Steel Sunshade
2017B0226	Extender Pole

SPARES	
2331B1100	Spare Universal Mounting Bracket Plate
2017B0112	Spare Standard Sunshade (Plastic)
2331B1150	Spare Terminal Block Set (5 Pack)
2331B1160	Spare Antenna Cover (5 Pack)

14 Specifications

Specifications	
Primary Gases (Performance approved gases[1, 2])	Searchline Excel Plus & Edge will respond to a wide range of Hydrocarbon Gases*: Methane[1,2], Ethane[1], Propane[1,2], Butane[1], Pentane[1], Hexane, Ethylene[1], Propylene[1], [1] FM Performance Approved; [2] DNV approved; The default calibration is to Universal Hydrocarbon**.
Optional Gases	Calibration to other gases is optional and should be consulted with Honeywell.
Range	Methane 0–5 LEL.m / 0–220,000 ppm.m Ethane 0–5 LEL.m / 0–120,000 ppm.m Propane 0–5 LEL.m / 0–85,000 ppm.m Butane 0–5 LEL.m / 0–70,000 ppm.m Pentane 0–5 LEL.m / 0–55,000 ppm.m Hexane 0–5 LEL.m / 0–50,000 ppm.m Ethylene 0–5 LEL.m / 0–115,000 ppm.m Propylene 0–5 LEL.m / 0–100,000 ppm.m
Recommended Alarm Setting	Low 1 LEL.m (and equivalent ppm.m): Methane 44,000 ppm.m Ethane 24,000 ppm.m Propane 17,000 ppm.m Butane 14,000 ppm.m Pentane 11,000 ppm.m Hexane 10,000 ppm.m Ethylene 23,000 ppm.m Propylene 20,000 ppm.m High 3 LEL.m (and equivalent ppm.m): Methane 132,000 ppm.m Ethane 72,000 ppm.m Propane 51,000 ppm.m Butane 42,000 ppm.m Pentane 33,000 ppm.m Hexane 30,000 ppm.m Ethylene 69,000 ppm.m Propylene 60,000 ppm.m
Recommended Minimum Alarm Setting	0.5 LEL.m (and equivalent ppm.m): Methane 22,000 ppm.m Ethane 12,000 ppm.m Propane 8,500 ppm.m Butane 7,000 ppm.m Pentane 5,500 ppm.m Hexane 5,000 ppm.m Ethylene 11,500 ppm.m Propylene 10,000 ppm.m
Path Length	Searchline Excel Plus: 2 m to 120 m (6 ft to 393 ft) Searchline Excel Edge: 60 m to 330 m (196 ft to 1082 ft)
Speed of Response	T90 less than 3 seconds
Analog Output Signal	4–20 mA Normal operation, 1 mA Fault* 2 mA Inhibit, 3 mA Warning, 2.5 mA Beam Block Warning, 21 mA Overrange *Searchline Excel Plus and Searchline Excel Edge will indicate Fault after 30 s beam blockage. This value is programmable. To comply with FM performance approval, the maximum value for Time to Block is 200 s.
Environmental Operating Temperature	-55 °C to +75 °C (-67 °F to +167 °F); DNVGL-CG-0339 Location Class B
Storage Temperature Range	-55 °C to +75 °C (-67 °F to +167 °F) DNVGL-CG-0339 Location Class B
Power Supply	24 Vdc nominal (18 Vdc to 32 Vdc)

* Searchline Excel Plus & Edge will respond to most hydrocarbon gases as most do absorb IR in the required wavelengths.

** Calibration to Universal Hydrocarbon covers a range of specific but different gases within one calibration that meets the requirements of the performance standard.

Specifications	
Power Consumption (average RMS)	**Transmitter,** for ambient operating temperature: -55°C (-67°F) to -30°C (-22°F) 11.8 W -30°C (-22°F) to +30°C (+86°F) 5.6 W above +30°C (+86°F) 3.8 W **Receiver,** for ambient operating temperature: -55°C (-67°F) to -30°C (-22°F) 7.4 W -30°C (-22°F) to +30°C (+86°F) 4.8 W above +30°C (+86°F) 3.0 W See *Electrical Installation* of this manual for full details.
Cold Start / Heat-up Power Consumption	Heat-up last approx. 20 min for both Transmitter and Receiver Transmitter: 17 W Receiver: 10 W for ambient operating temperature higher than -30 °C (-22 °F) 15 W for ambient operating temperature lower than -30 °C (-22 °F) (active heater)
Output Signals	4–20 mA with HART, Fault relay, Alarm 1 relay, Alarm 2 relay, Modbus, Bluetooth® (range up to 20 m (66 ft), depends on mobile device and environmental conditions)
Relay Outputs	Max. 32 Vdc/ac, max. 2 A resistive load
Inrush Current	Transmitter: 0.5 A for less than 20 ms Receiver: 0.3 A for less than 20 ms
Humidity	0–99 % RH Non-condensing, DNVGL-CG-0339 Location Class B
Pressure	91.5–105.5 kPa (915–1055 mBar, non-compensated)
Repeatability	±0.4 LEL.m: Methane ±17,600 ppm.m Ethane ±9,600 ppm.m Propane ±6,800 ppm.m Butane ±5,600 ppm.m Pentane ±4,400 ppm.m Hexane ±4,000 ppm.m Ethylene ±9,200 ppm.m Propylene ±8,000 ppm.m
Temperature Drift (-55 °C to +75 °C) (-67 °F to +167 °F)	±0.2 LEL.m @ zero: Methane ±8,800 ppm.m Ethane ±4,800 ppm.m Propane ±3,400 ppm.m Butane ±2,800 ppm.m Pentane ±2,200 ppm.m Hexane ±2,000 ppm.m Ethylene ±4,600 ppm.m Propylene ±4,000 ppm.m ±0.5 LEL.m @ 3LEL.m: Methane ±22,000 ppm.m @ 132,000 ppm.m Ethane ±12,000 ppm.m @ 72,000 ppm.m Propane ±8,500 ppm.m @ 51,000 ppm.m Butane ±7,000 ppm.m @ 42,000 ppm.m Pentane ±5,500 ppm.m @ 33,000 ppm.m Hexane ±5.000 ppm.m @ 30,000 ppm.m Ethylene ±11.500 ppm.m @ 69,000 ppm.m Propylene ±10.000 ppm.m @ 60,000 ppm.m
Warm-up Time	Less than 5 minutes (operational), less than 1 hour (fully stabilised)
Internal Battery Cell	TLH-2450, 10-year lifetime (replaced only by authorized service)
Weight	Searchline Excel Plus and Searchline Excel Edge: Rx 6.1 kg (13.4 lbs), Tx 6.0 kg (13.2 lbs) Universal Mounting Bracket: 3.1 kg (6.9 lbs) Stainless Steel Mount Plate Adaptor: 3.71 kg (8.18 lbs) Stainless Steel
Dimensions	Searchline Excel Plus and Searchline Excel Edge: 103 mm dia x 325 mm x 180 mm (4.06" dia x 12.8" x 7.09") Universal Mounting Bracket: 165 mm x 165 mm x 130 mm (6.5" x 6.5" x 5.12") Mount Plate Adaptor: 210 mm x 210 mm x 127 mm (8.23" x 8.23" x 5")
Ingress Protection	IP 66/67 (Type 4X, in accordance with NEMA 250)[1, 2] [1] IP and/or corrosion resistance ratings refer to the instrument enclosure protection. They do not imply that the instrument will detect gas during and immediately after exposure to those conditions [2] Refer to Ch.9 Maintenance for recommendations and maintenance requirements regarding deluge and flooding Resistance to salt mist and sulphuric atmosphere (15-60 minutes exposure to salt air/mist; 15–60 minutes to sulphuric atmosphere)

Specifications	
Accessories	2331B1020 Large Adjustable Mounting Bracket 2017B0113 Stainless Steel Sunshade 2017B0299 Alignment Scope 2017B0218 Functional Test Filters Functional Test Filters Extender 2017B0185 Gassing Test Cell Hazardous Area Mobile Phone Honeywell Fixed Platform App[1] [1] tested with Ecom Smart-EX02 mobile phone. Other phones and tablets running Android 5.1 or higher may work, but Honeywell does not guarantee full functionality.
Spares	2331B1100 Spare Universal Mounting Bracket Plate 2017B0112 Spare Standard Sunshade (Plastic) 2331B1150 Spare Terminal Block Set (5 Pack) 2331B1160 Spare Antenna Cover (5 Pack)
Compliance to Standards	Core Approvals: EN 50270: (EMC) IEC/EN 61000-6-4; Radio Equipment Directive 2014/53/EU IEC/EN/UL/CSA 61010 (Electrical Safety) FCC / IC RoHS, China RoHS
Safety Approvals	**cULus** Cl. I, Div.1, Gr. B,C,D, T4 (Ta -55°C to +75°C) Cl. II, Div.1, Gr. E,F,G, T4 (Ta -55°C to +55°C) Cl. III Cl. I, Zn. 1 AEx db ia op is IIC T4 Gb (Ta -55°C to +75°C) Cl. I, Zn. 1 AEx db eb ia op is IIC T4 Gb (Ta -55°C to +75°C) Zn. 21 AEx ia op is tb IIIC T100°C Db (Ta -55°C to +55°C) Ex db ia op is IIC T4 Gb X (Ta -55°C to +75°C) Ex db eb ia op is IIC T4 Gb X (Ta -55°C to +75°C) Ex ia op is tb IIIC T100°C Db X (Ta -55°C to +55°C) Um = 250 Vrms **DEMKO 20 ATEX 2281X / IECEx UL 20.0009X / UL21UKEX2047X** (Ex d install) Ex db ia op is IIC T4 Gb (Ta -55°C to +75°C) or (Ex de install) Ex db eb ia op is IIC T4 Gb (Ta -55°C to +75°C) Ex ia op is tb IIIC T100°C Db (Ta -55°C to +75°C) Um = 250 Vrms **Performance Approvals** FM 60079-29-4 /UL 60079-29-4 **Functional Safety (SIL)** SIL 2 certified by TÜV (SÜD) to EN61508 **Core Approvals** EN 50270: (EMC) IEC/EN 61000-6-4; Radio Equipment Directive 2014/53/EU IEC/EN/UL/CSA 61010 (Electrical Safety); FCC / IC; RoHS, China RoHS

15 Product Warranty

Honeywell Analytics warrants the Searchline Excel Plus and Searchline Excel Edge Open Path Flammable Hydrocarbon Gas Detector transmitter and receiver components, except software and software components, for 5 years against defective materials and faulty workmanship. The software and software components, including any documentation designated for use with such software or software components, are provided “AS IS” and with potential defects.

This warranty does not cover consumable items, batteries, fuses, normal wear and tear, or damage caused by accident, abuse, improper installation, unauthorized use, modification or repair, ambient environment, poisons, contaminants or abnormal operating conditions.

This warranty does not apply to sensors or components that are covered under separate warranties, or to any third party cables and components.

In no event shall Honeywell Analytics be liable for any damages or injury of any nature or kind, no matter how caused, that arise from incorrect installation, handling, maintenance, cleaning or use of this equipment.

In no event shall Honeywell Analytics be liable for any equipment malfunction or damages whatsoever, including (without limitation) incidental, direct, indirect, special, and consequential damages, damages for loss of business profits, business interruption, loss of business information, or other pecuniary loss, resulting from the incorrect installation, handling, maintenance, cleaning or use of this equipment.

Any claim under the Honeywell Analytics Product Warranty must be made within the warranty period and as soon as reasonably practicable after a defect is discovered. Please contact your local Honeywell Analytics Service representative to register your claim.

This is a summary. For full warranty terms please refer to the **Honeywell General Statement of Limited Product Warranty**, which is available on request.

Find out more
www.sps.honeywell.com

Contact Honeywell Analytics:

Europe, Middle East, Africa
Life Safety Distribution GmbH
Tel: 00800 333 222 44 (Freephone no.)
Tel: +41 (0)44 943 4380 (Alternative no.)
Middle East Tel: +971 4 450 5800 (Fixed Gas Detection)
Middle East Tel: +971 4 450 5852 (Portable Gas Detection)
gasdetection@honeywell.com

Americas
Honeywell Analytics Inc.
Tel: +1 847 955 8200
Toll free: +1 800 538 0363
detectgas@honeywell.com

Asia Pacific
Honeywell Co Ltd
Tel: +82 (0) 2 6909 0300
India Tel: +91 124 4752700
China Tel: +86 10 5885 8788-3000
analytics.ap@honeywell.com

Technical Services
EMEA: HAexpert@honeywell.com
US: ha.us.service@honeywell.com
AP: ha.ap.service@honeywell.com

www.sps.honeywell.com

Honeywell

Please Note:
While every effort has been made to ensure accuracy in this publication, no responsibility can be accepted for errors or omissions. Data may change, as well as legislation and you are strongly advised to obtain copies of the most recently issued regulations, standards and guidelines. This publication is not intended to form the basis of a contract.

06/2024
2017M1220 Issue 4 EN
© 2024 Honeywell Analytics